BRIHANMUMBAI MUNICIPAL CORPORATION

HYDRAULIC ENGINEER'S DEPARTMENT

E-TENDER

FOR

Name of Work: - (HE-C-CT-IMPRO-09) Laying of 1200 mm dia. 2 nos of MS water carrier pipe through 1500 mm dia. (2 nos) MS casing pipe by Micro tunneling method below railway track at KM 13/250-285 near Mahim Railway station, Mahim G/North ward in Zone-II.

File No.:- MGC/F/ 2433 / dt. 03.11.2026

Tender Code:- 2026_MCGM_1354970_1

Sd/-	Sd/-	Sd/-
S.E.W.W.(Const.)City	**A.E.W.W.(Const.) City**	**E.E.W.W.(Const.) City**

Sd/-	**Sd/-**	**Sd/-**
DY. HYDRAULIC ENGINEER (CONSTRUCTION)	**HYDRAULIC ENGINEER**	**D.M.C.(SE)**

Website: http://mahatenders.gov.in/

Office of Executive Engineer Water Works (Const.) City
Hydraulic Engineer's Department,
B. M. C. Engineering Hub Building, First Floor,
Dr. E Moses Road, Worli,
Mumbai – 400018

This page is intentionally kept Blank

INDEX

SECTION	DESCRIPTION	PG. NO.
1	E-TENDER NOTICE	05 to 12
2	ELIGIBILITY(POST-QUALIFICATION) CRITERIA	13 to 16
3	DISCLAIMER	17 to 20
4	INTRODUCTION	21 to 24
5	E-TENDER ONLINE SUBMISSION PROCESS	25 to 28
6	INSTRUCTIONS TO APPLICANTS	29 to 134
7	SCOPE OF WORK	135 to 138
8	BILL OF QUANTITIES	139 to 164
9	GENERAL CONDITIONS OF CONTRACT	165 to 214
10	SPECIFICATIONS	215 to 218
11	FRAUD AND CORRUPT PRACTICES	219 to 224
12	PRE-BID MEETING	225 to228
13	LIST OF APPROVED BANKS	229 to 232
14	APPENDIX	233to 256
15	CIRCULARS	257 to 326

This page is intentionally kept Blank

SECTION 1

E-TENDER NOTICE

This page is intentionally kept Blank

Brihanmumbai Municipal Corporation

Dy.H.E./Const/City-06/Tender/2026-27dated 17.11.2026

E-TENDER NOTICE

Subject:- **(HE-C-CT-IMPRO-09**) Laying of 1200 mm dia. 2 nos of MS water carrier pipe through 1500 mm dia. (2 nos) MS casing pipe by Micro tunneling method below railway track at KM 13/250-285 near Mahim Railway station, Mahim G/North ward in Zone-II.

The Brihanmumbai Municipal Corporation (BMC) invites online e-tender to appoint Contractor for the aforementioned work from contractors of repute, multidisciplinary engineering organizations i.e. eminent firm, Proprietary/Partnership Firms/ Private Limited Companies/ Public Limited Companies/Companies registered under the Indian companies act 2013, the contractors registered with the Brihanmumbai Municipal Corporation (BMC) in **Class AA, Category C-IV as per old registration and Class I(B) as per new registration** and from the contractors/firms equivalent and superior classes registered in Central or State Government/Semi Govt. Organization/Central or State Public Sector Undertakings, will be allowed subject to condition that, the contractors who are not registered with BMC will have to apply for registering their firm within three months' time period from the award of contract, and shall establish office in Mumbai Metropolitan Region otherwise their Bid Security i.e. **E.M.D (Earnest Money Deposit) will be forfeited/recovered and an amount equal to Registration Fee of respective class will be recovered as penalty.** Bidding Process will comprise of THREE stages.

The forms of Tender documents are available on the e-Tendering website https://mahatenders.gov.in. The aspiring Applicants will have to download Tender form, from the website mentioned above. The bidder has to fill in online format and upload information regarding Tender Online. Also, he has to download the Tender application form from website, fill it and upload the scanned copy of duly filled form, along with required documents.

For downloading the Tender documents, the bidders will have to get registered with e-tender portal (https://mahatenders.gov.in) for the e-tendering process and obtain login credentials to participate in the online Tender process. The details of the same are available on https://mahatenders.gov.in. For registration, enrolment for digital signature certificates and user manual, please refer to respective links provided in e-tendering tab on https://mahatenders.gov.in.

The applicant has to pay Tender Fee of Rs. 19965 + 18 % GST (9 % CGST+ 9 % SGST) on Mahatender Portal by online means of payment as per Circular No. CA/FRG/15 dt.20.03.2026.

Name and location of work	Contract Period	Estimated Cost of Project
(HE-C-CT-IMPRO-09) Laying of 1200 mm dia. 2 nos of MS water carrier pipe through 1500 mm dia. (2 nos) MS casing pipe by Micro tunneling method below railway track at KM 13/250-285 near Mahim Railway station, Mahim G/North ward in Zone-II.	**18 Months (Excluding Monsoon)**	**₹ 16,66,11,400 /- (Excluding GST)**

While submitting duly filled tender document through e-tender portal https://mahatenders.gov.inbidder needs to pay Earnest Money Deposit (EMD) (1% of Estimated Cost) amounting to **Rs.16,66,200.00/-** through online payment gateway of GoM onurlhttps://mahatenders.gov.in. EMD is refundable in accordance to the relevant clause of bid document, except in the case of the selected Bidder whose Bid Security/EMD shall be retained. The bidder shall upload scan copy of online paid EMD along with the bid submission in Packet A as per the direction given in the circular u/no. CA/Finance/Project/19 dated 04.03.2024. E.M.D. is refundable in accordance to the relevant clause of bid document, except in the case of the selected Bidder whose Bid Security/E.M.D. shall be retained. The Bidders will have to provide Earnest Money Deposit through the payment gateways as mentioned above while submitting the bids. The Bid shall be summarily rejected if it is not accompanied by the Earnest Money Deposit in the form as mentioned above. The tender is available on e-Tendering website https://mahatenders.gov.in. as mentioned in the Header Data of the tender.

- The Applicant has to prepare & submit Tender Documents Online on or before last date of submission as mentioned in tender notice.
- The Applicant should upload the documents in readable form, He should take trial of uploads by taking printout. The unreadable documents will be treated as null & void. The remaining documents will be evaluated. The decision of opening Authority regarding this will be binding to all applicants.
- The Municipal Commissioner reserves the right to reject all or any of the e- tender(s) without assigning any reasons at any stage.
- This tender document is not transferable.

Packet A, B & C shall be opened after dates as mentioned in header data. All the responsive and eligible bidders if they so wish can be present at the time of opening of bids, in the office of Executive Engineer, Water Works (Construction) City. The Packet C shall be opened if bids submission in Packet A& B satisfies/includes all the requirements and same are found acceptable to the Authority.

The dates and time for submission and opening the bids are as shown in the Header Data. If there are any changes in the dates the same will be displayed on the BMC Portal. (http://portal.mcgm.gov.in) as well as https://mahatenders.gov.in.

The Applicants interested for the above referred works may contact the Executive Engineer Water Works (Const.) City at the following address on any working day during office hours.

Office of Executive Engineer Water Works (Const.) City
Hydraulic Engineer's Department,
B.M.C. Engineering Hub Building, First Floor
Dr. E Moses Road, Worli,
Mumbai - 400018.

The applicants if desired may visit the site under reference located in **G/N ward of City area of Zone II,**Mumbai and can collect the information of the present status from the Office of Executive Engineer Water Works (Const.) City who have invited the bids.

The BMC reserves the rights to accept any of the application or reject any or all the application received for above works, without assigning any reasons thereof. The information regarding above subject matter is available on e-Tendering website (https://mahatenders.gov.in).

Tenderers are requested to submit and upload the tenders in time on or before the stipulated day so as to avoid rush at the closing hours. BMC will not be responsible for poor connectivity of network / internet services / connectivity of servers / snag in system / breakdown of network / or any other interruptions. If any online information uploaded but not received by Bid creator (BMC) within stipulated time limit, BMC will not be held responsible at any cost and such bids cannot be validated. Any online intimation / information asked to be submitted by Bidders /Contractors or sent to bidders/ Contractors, if not receiving or bounced back at the receiving end due to any problem in the server or connectivity, BMC will not be held responsible.

Sd/-

Hydraulic Engineer

This page is intentionally kept Blank

HEADER DATA

Tender Reference No:	File No: H.E. Ref No:-Dy.H.E./Const./City-06/Tender 2026-27/ dtd.17.11.2026 Tender Code:**2026_MCGM_1354970_1** Work code: **(HE-C-CT-IMPRO-09)**
Name of Organization	Brihanmumbai Municipal Corporation
Subject	**(HE-C-CT-IMPRO-09**) Laying of 1200 mm dia. 2 nos of MS water carrier pipe through 1500 mm dia. (2 nos) MS casing pipe by Micro tunneling method below railway track at KM 13/250-285 near Mahim Railway station, Mahim G/North ward in Zone-II.
Tender Fees	Rs. 19965 + 18% GST **(As per Circular No. CA/FRG/15 dt. 20.03.2026)**
Cost of E-Tender(Estimated Cost)	**Rs. 16,66,11,400/- (Excluding GST)**
Bid Security Deposit/ EMD	**Rs. 16,66,200/-**(1 % of Estimated Cost)
Bid Validity Period	180 days (From Due date of Bid)
Date of issue and sale of tender	Dt. __/__/2026 from 11.00 Hrs.
Last date &time for sale of tender	Dt. __/__/2026 upto16.00Hrs
Bid Sale End Date & Time	Dt. __/__/2026 upto 16.00Hrs
Pre-Bid Meeting	Dt. __/__/2026 at 15:00 Hrs.
Opening of Packet A	Dt. __/__/2026 after 16.00 Hrs.
Opening of Packet B	Dt. __/__/2026 after 16.00 Hrs.
Opening of Packet C	Dt. __/__/2026 after 15.00 Hrs.
Address for communication	Office of Executive Engineer Water Works (Const.) City, Hydraulic Engineer's Department, B.M.C. Engineering Hub Building, First Floor, Dr. E Moses Road, Worli, Mumbai - 400018. Email: **eeconstcity.he@mcgm.gov.in**
Venue for opening of bid	Office of Executive Engineer Water Works (Const.) City, Hydraulic Engineer's Department, B.M.C. Engineering Hub Building, First Floor, Dr. E Moses Road, Worli, Mumbai - 400018

This tender document is not transferable.

The BMC reserves the rights to accept any of the application or reject any or all the application received for above subject without assigning any reason thereof.

Sd/-
Hydraulic Engineer

This page is intentionally kept Blank

SECTION 2

ELIGIBILITY

(POST QUALIFICATION)

CRITERIA

This page is intentionally kept Blank

POST QUALIFICATION CRITERIA

2.1 Technical Capacity

The tenderer(s) in their own name should have satisfactorily completed the work of similar nature in BMC /Semi Govt. /Govt. & Public Sector Organizations during last seven (7) years ending last day of month previous to the date of issue of tender as a prime Contractor (or as a nominated sub-Contractor, where the subcontract had involved similar nature of work as described in the scope of works in this bid document, provided further that all other qualification criteria are satisfied).

a) Three similar **completed** works **each** of value not less than the value equal to **30%** of estimated cost**(Excluding GST)** put to tender i.e. **Rs.** 499.83**Lakhs each.**

Or

b) **Two** similar **completed** works **each** of value not less than the value equal to **40%** of estimated cost**(Excluding GST)** put to tender i.e. **Rs.** 666.45**Lakhs each.**

Or

c) **One** similar **completed** work of value equal and or not less than the **60%** of estimated cost**(Excluding GST)**put to tender i.e.**Rs.** 999.67**Lakhs each.**

The value of completed works shall be brought to current costing level by enhancing the actual value of work at compound rate of 10 % per annum; calculated from the date of completion to the date of issue of tenders.

***In case of ongoing works to be considered, the bidder must have received payment bills of 80% of the contract sum for the work/works executed last day of month previous to the one in which bids are invited.**

2.2 Financial Capacity`

Achieved an average annual financial turnover as certified by 'Chartered Accountant' (in all classes of civil engineering construction works only) equal to **30%** of the estimated cost**(Excluding GST).** i.e. **Rs. 499.83 Lakhs (Excluding GST) of** work in **last three (3) financial years** immediately preceding the Financial Year in which bids are issued.

- **To ascertain this, tenderer(s) shall furnish /upload the financial statement (Audited balance sheet) duly certified by Chartered Accountant.**
- The value of completed works shall be brought to current costing level by enhancing the actual value of work at compound rate of 10 % per annum; calculated from the date of completion to the date of issue of tenders.

2.3 Similar Experience:

a) The bidder shall have similar experience of providing and laying Sewer/ Water/ Petroleum/ Gas line/ Telecommunication cables/ High Power Cables by Microtunnelling in extremely hard Rock having Unconfined Compressive Strength upto 250 Mpa.

And

b) Completed work of laying of CI/DI/MS water main allied works related to water main, pressure pipeline as rising main/petroleum/gas of minimum 450mm dia. of MS water main / more than 450mm dia. for CI/DI water main" orThey should submit Memorandum of Understanding (MOU) with a firm and the firm should have laying experience as per the requirement given above either in his own capacity or as an officially approved Sub- contractor. The tenderer has to submit all the credentials of the firm with whom they are entering with MOU.

In case of various diameter works, the cost of work as per above mentioned criteria shall be bifurcated, certified by concerned authority and submitted accordingly.

- MS Water Main – works of 450mm dia. and above
- CI / DI Water Main – works of more than 450mm dia.

2.4 Bid Capacity:

The bid capacity of the prospective bidders will be calculated as under:

Assessed Available Bid Capacity = (A* N* 2 - B)

Where,

A = Maximum value of Civil Engineering works completed in any one year (year means financial year) during **the last five years** (updated to the price level of the Financial year in which bids are invited at a compounded rate of 10% per year) taking into account the completed works.

Enhancement of turnover up to level of 2026-2027 shall be done as per updating factors given below.

Updating factor for 2021-2022 is 1.46
Updating factor for 2022-2023 is 1.33
Updating factor for 2023-2024 is 1.21
Updating factor for 2024-2025 is 1.10
Updating factor for 2025-2026 is 1.00

N = Number of years prescribed for completion of the Project/Works, **excluding monsoon period**, for which these bids are being invited. (E.g. 7 months = 7/12 year) For every intervening monsoon 0.33 shall be added to N.

B = Value of existing commitments **(only allotted works)** on the last date of submission of bids as per bidding document and on-going works to be completed during the period of completion of the Project/Works for which these bids are being invited.

Note: The statement showing the value of existing commitments and on-going works as well as the stipulated period of completion remaining for each of the works listed should be attached along with certificates duly signed by the Engineer-in Charge, not below the rank of an Executive Engineer or equivalent. Bid capacity calculated should be more than Cost of work put to tender

Even though the bidders meet the above qualifying criteria, they are subject to be disqualified if they have:

- made misleading or false representation in the forms, statements and attachments submitted in proof of the qualification requirements; and/or
- Record for poor performance such as abandoning the works, not properly completing the contract, inordinate delays in completion, ~~litigation history~~, or financial failures etc.

SECTION 3

DISCLAIMER

This page is intentionally kept Blank

DISCLAIMER

The information contained in this e-tender document or provided to Applicant(s), whether verbally or in documentary or any other form, by or on behalf of the Brihanmumbai Municipal Corporation(BMC), hereafter also referred as "The Authority ", or any of its employees or advisors, is provided to Applicant(s) on the terms and conditions set out in this e-tender and such other terms and conditions subject to which such information is provided.

This e-tender includes statements, which reflect various assumptions and assessments arrived at by the Brihanmumbai Municipal Corporation(BMC) in relation to the Project. Such assumptions, assessments and statements do not purport to contain all the information that each Applicant may require. This e-tender may not be appropriate for all persons, and it is not possible for the Brihanmumbai Municipal Corporation(BMC), its employees or advisors to consider the investment objectives, financial situation and particular needs of each party who reads or uses this e-tender. The assumptions, assessments, statements and information contained in this e-tender may not be complete, accurate, adequate or correct. Each Applicant should therefore, conduct its own investigations and analysis and should check the accuracy, adequacy, correctness, reliability and completeness of the assumptions, assessments, statements and information contained in this e-tender and obtain independent advice from appropriate sources.

Information provided in this e-tender to the Applicant(s) is on a wide range of matters, some of which may depend upon interpretation of law. The information given is not intended to be an exhaustive account of statutory requirements and should not be regarded as a complete or authoritative statement of law. The Brihanmumbai Municipal Corporation (BMC) accepts no responsibility for the accuracy or otherwise for any interpretation or opinion on law expressed here.

The Brihanmumbai Municipal Corporation (BMC), its employees and advisors make no representation or warranty and shall have no liability to any person, including any Applicant or Bidder, under any law, statute, rules or regulations or tort, principles of restitution or unjust enrichment or otherwise for any loss, damages, cost or expense which may arise from or be incurred or suffered on account of anything contained in this e-tender or otherwise, including the accuracy, adequacy, correctness, completeness or reliability of the e-tender and any assessment, assumption, statement or information contained therein or deemed to form part of this e-tender or arising in any way with pre-qualification of Applicants for participation in the Bidding Process. The Brihanmumbai Municipal Corporation(BMC) also accepts no liability of any nature whether resulting from negligence or otherwise howsoever caused arising from reliance of any Applicant upon the statements contained in this e-tender.

The Brihanmumbai Municipal Corporation(BMC) may, in its absolute discretion but without being under any obligation to do so, update, amend or supplement the information, assessment or assumptions contained in this e-tender.

The issue of this e-tender does not imply that the Brihanmumbai Municipal Corporation(BMC) is bound to select and short-list pre-qualified Applications for Bid Stage or to appoint the selected Bidder or Concessionaire, as the case may be, for the Project and the Brihanmumbai Municipal Corporation(BMC) reserves the right to reject all or any of the Applications or Bids without assigning any reasons whatsoever.

The Applicant shall bear all its costs associated with or relating to the preparation and submission of its Application including but not limited to preparation, copying, postage, delivery fees, expenses associated with any demonstrations or presentations which may be required by The Brihanmumbai Municipal Corporation(BMC) or any other costs incurred in connection with or relating to its Application. All such costs and expenses will remain with the Applicant and the Brihanmumbai Municipal Corporation (BMC) shall not be liable in any manner whatsoever for the same or for any other costs or other expenses incurred by an Applicant in preparation or submission of the Application, regardless of the conduct or outcome of the Bidding Process.

SECTION 4

INTRODUCTION

This page is intentionally kept Blank

INTRODUCTION

4.1 Background:

The Brihanmumbai Municipal Corporation covers an area of 437.71 sq.kms.with a population of **1.24 Crores as per census of 2011**. The metropolis accounts major portion of India's international trade and government's revenue, from being one of the foremost centers of education, science and technological research and advancement.

The Mumbai Metropolis has historic tradition of strong civic activism dedicated to the cause of a better life for all its citizens. And it is the Brihanmumbai Municipal Corporation (BMC), hereafter called the "corporation", is the primary agency responsible for urban governance in Greater Mumbai.

BMC (The Authority) is one of the largest local self-governments in the Asian Continent. In observance of historic traditions of strong civic activism, with the change in time and living conditions to match with the urbanization, BMC has mainly focused in providing almost all kinds of engineering services viz, Hydraulics, storm water drain, sewerage, water supply projects, roads, bridges, solid waste management, and environmental services. Beside this, the BMC is also providing dedicated services in various segments such as Health, Primary Education as well as the construction and maintenance of Public Markets and Slaughter Houses.

BMC is an organization having different departments, right from engineering depts. to health depts. Moreover, BMC has other dept. like education, market, fire brigade dept., Octroi and other such departments where quite a good number of staff members are working.

4.1 Scope of Work :

BMC is primarily an organization, which in the interest of citizens and with the speed of urbanization deals with the variety of the infrastructure services and delivered to the public by different departments like Water Supply Projects, Sewerage Projects, Hydraulic Engineers Department, Storm Water Drain/Roads and bridges and Building Construction etc.

- **This particular tender comes under the category of "~~Regular, Routine and Maintenance works/~~ Original and New construction works/ ~~For Other Special works".~~**

The scope of work consists of:

1. Excavation for Jacking Pit inNavrang Compound and Receiving Pit on Mori Road Junction, Senapati Bapat Marg by Well Sinking and allied works.
2. Laying of 1200mm dia. (16mm thick) Mild Steel (MS) carrier pipe through 1500mm dia. (22mm thick) MS casing pipe by Microtunneling from Navarang Compound (point F) to Mori Road Junction(point G) below Railway tracks near Mahim Railway station in G/North ward.
3. Laying of 1800 mm dia. MS pipe from Jacking pit (point F) to Upper vaitarna main and connecting the same to existing 2700mm dia. UV Water main at point R and allied works in NavarangCompound..
4. Laying of 1800mm dia. MS pipe from Mori Road Junction(Receiving pit) point G and connecting the same to existing 1800mm dia. Water main at point H and allied works on Senapati Bapat Marg.

5. Laying of 900 mm dia. MS pipe near point H and connecting the same to existing 900mm dia. Water main at point S and allied works on Senapati Bapat Marg
6. 4nos of Cross connections of 1800mm X 1200mm dia. and fixing of 1800mm dia. BFV's in Navarang Compound near Vaitarna main (Jacking Pit) &at Mori road junction (Receiving Pit) respectively.
7. Cross connection of 2700mm X 1800mm dia. and fixing of 1200mm dia. BFV's in Navarang Compound near Upper Vaitarna main at point R.
8. Cross connection of 1800mm X 450mm dia. and fixing of 450mm dia. BFV's (Point A) in Navarang Compound near Vaitarna main.
9. Cross connection of 1800mm X 1800mm dia. (Point H) on Senapati Bapat Marg
10. Cross connection of 1800mm X 900mm dia. (Point S) on Senapati Bapat Marg.
11. Cross connection of 1800mm X 1800mm dia. (Point O) on Senapati Bapat Marg
12. Commissioning of all distribution mains.
13. Excavation for above works, encasement of water mains & reinstatement of all works.

SECTION 5

E-TENDERING ONLINE SUBMISSION PROCESS

This page is intentionally kept Blank

E-TENDERING ONLINE SUBMISSION PROCESS

Refer the website https://mahatenders.gov.inunder Bidders Manual Kit, for Instruction to Bidder.

This page is intentionally kept Blank

SECTION 6

INSTRUCTIONS TO APPLICANTS

This page is intentionally kept Blank

INSTRUCTIONS TO APPLICANTS

6.1 Scope of Application

The Authority wishes to receive Applications for Qualification in order to SELECT experienced and capable Applicants for the Bid Stage.

6.2 Eligibility of Applicants

The Brihanmumbai Municipal Corporation (BMC) invites e-tender to appoint Contractor for the aforementioned work from contractors of repute, multidisciplinary engineering organizations i.e. eminent firm, Proprietary/Partnership Firms/ Private Limited Companies/ Public Limited Companies/Companies registered under the Indian companies' act 2013, the contractors registered with the Brihanmumbai Municipal Corporation (BMC) in **Class AA, category IV as per old registration and Class I(B)as per new registration** and from the contractors/firms equivalent and superior classes registered in Central or State Government/Semi Govt. Organization/Central or State Public Sector Undertakings, will be allowed subject to condition that, the contractors who are not registered with BMC will have to apply for registering their firm within three months' time period from the award of contract, otherwise their Bid Security i.e. **E.M.D (Earnest Money Deposit) will be forfeited/recovered and an amount equal to Registration Fee of respective class will be recovered as penalty.**

6.3 Classes available for Civil Contractors (As per old registration rules):

Category	*Description of work*
Building C-I	Building & allied works, pile foundation, precast or cast in situ concrete works, diaphragm walls, ground anchors and allied works, water proofing, leak proofing of various types of structures.
Bridges C-II	Bridges including road over bridges, flyover, foot over bridges, subways and culverts.
Roads C-III	Road works of various types including storm water drains culverts and training/ de-silting of nallas, underground storm water drains.
Water Supply C-IV	**Laying of water mains, rising mains, water pumping stations, reservoirs, head works.**
Sewerage C-V	Laying of sewers, rising main & underground storm water drains, sewage pumping stations, treatment plants, outfalls etc.

6.4 Class available according to the limits of works, amount of solvency, registration fees & amount of standing deposit prescribed for each class (As per old registration rules).

Class	*Works limit*	*Solvency amount*	*Scrutiny fees*	*Registration fees*	*Renewal fees*	*Standing deposit*
	Rs	*Rs*	*Rs*	*Rs*	*Rs*	*Rs*
		In Lacs				
AA	**Without limit**	**60**	**2000**	**4000**	**2000**	**7,50,000.00**
A	upto 3 Crores	30	2000	4000	2000	4,50,000.00
B	upto 1 Crore	20	1000	2000	1000	3,00,000.00
C	upto 50 Lacs	15	1000	2000	1000	1,50,000.00
D	upto 25 Lacs	10	1000	2000	1000	1,12,500.00
E	upto 10 Lacs	5	1000	2000	1000	45,000.00

***6.5* MINIMUM FINANCIAL AND ORGANIZATIONAL REQUIREMENTS FOR CIVIL ENGINEERING DISCIPLINE AS PER REFRAMED RULES**

MINIMUM FINANCIAL AND ORGANIZATIONAL REQUIREMENTS FOR CIVIL ENGINEERING DISCIPLINE AS PER REFRAMED RULES

Sr. No.	Class	Upper limit of Tendering	Minimum Solvency	Total Turn-Over in Last 3 Years	Cost of Single Work Completed within Last 3 years	No. of Civil Engineers Employee
1	2	3	4	5	6	7
1	I(A)	Without Limit	200	4000	1500	4 Graduate with 5 years or 1 Graduate with 5 years and 5 Diploma Holder with7years experience.
2	**I(B)**	**2500**	**175**	**2500**	**750**	**3 Graduate with 5 years or 1 Graduate with 5 years and 4 Diploma Holder with 7 years experience.**
3	I(C)	1500	150	1500	300	3 Graduate with 5 years or 1 Graduate with 5 years and 4 Diploma Holder with7years experience.
4	II	750	100	750	150	2 Graduate with 3 years or 1 Graduate with 3 years and 3 Diploma Holder with5years experience.

5	III	300	75	300	90	2 Graduate with 3 years or 1 Graduate with 3 years and 2 Diploma Holder with 5 years experience.
6	IV	150	40	150	50	1 Graduate with 1 year or 1 Diploma Holder with 3 years experience.
7	IV(A)	90	25	90	30	1 Graduate with 1 year or 1 Diploma Holder with 3 years experience.
8	V	50	15	50	15	1 Graduate with 1 year or 1 Diploma Holder with 3 years experience.
9	V(A)	30	8	0	0	1 Fresh Graduate or 1 Fresh Diploma Holder.
10	VI	15	2	0	0	1 Fresh Graduate or 1 Fresh Diploma Holder.
11	VII	10	1	0	0	1 Fresh Graduate or 1 Fresh Diploma Holder.
12	VIII	5	0.5	0	….	1 Fresh Graduate or 1 Fresh Diploma Holder.
13	IX	3	0.25	…..	….	1 Fresh Graduate or 1 Fresh Diploma Holder.
Note:- 1) A Solvency Certificate registered beyond 12 months from the date of its issue will not be considered. Certificate of Solvency (in Hindi/Marathi/English) shall be obtained from scheduled or Nationalize Bank, in the name of the applicant/Firm/Company only.						
2) Turn-over shall be supported with work completion/performance certificate of civil works only. In case of works carried out in private organization, T.D.S. Certificate is essential and certificate from License Architect is necessary.						
3) Cost of single work criteria will be governed as given in below table						

6.6 SINGLE WORK CRITERIA (Rs. In Lakhs) (As per New registration rules)

SINGLE WORK CRITERIA					
Sr.No.	Class	Upper limit of Tendering	Single work criteria(Applicant has to fulfill one of the following criteria)		
			Minimum Cost of Single Work Completed (within Last 3 years)	Cost of Two Works Completed costing not less than (With- in Last 3 years)	Cost of Three Works Completed costing not less than (Within Last 3 years)
1	2	3	4	5	6
1	I(A)	Without Limit	1500	750	500
2	**I(B)**	**2500**	**750**	**400**	**250**
3	I(C)	1500	300	150	100
4	II	750	150	75	50
5	III	300	90	50	30
6	IV	150	50	25	20
7	IV(A)	90	30	15	10
8	V	50	15	8	5

6.7 Equipment Capabilities as required for this work

Equipment Capability:

Sr.No.	Equipment owned/access to	Requirements (No.)		
		Regular and Routine works	New and Original Works	For other special works
1	2	3	4	5
01	Laser guided micro tunneling machines (Slurry shields) and ancillary equipment including hydraulic jacking system for tunneling and installation of 1200mm dia. casing pipe and 900mm dia. carrier pipe in extraordinary hard rock strata and varying ground conditions as the case may be in different stretches	-	1 no. Owned, or have assured access to (through hire, lease purchase agreement, availability of manufacturing capacity, or other means) (Tenderer must upload and submit supporting valid documents that he can mobilize on site all of this equipment within 30 days of the acceptance letter).	
02	Ground improvement equipment such as jet grouting/ compaction piling, etc		2 Sets	
03	Well sinking or Piling or trench box equipment		2 Sets	
04	Mobile Crane 100 tons capacity	-	1	
05	Excavator (5 ton)	-	1	
06	Generator 200KVA (440Volts)	-	1	
07	Drainage Pumps 20Kw & 10Kw	-	1 each	
08	Buried Services Locator.	-	1	
09	Grouting pump (min 200psi pressure)	-	1	
10	Portable Generator (minimum 40KVA)	-	3	
11	Pumps for dewatering	-	2 (15 BHP)	
12	Submersible pumps for dewatering	-	5 (10BHP) & 3 (5 BHP)	-
13	Rock breaker with compressor	-	2	-
14	Crane		1	-
15	Pipe cutter	-	4	
16	Ratchet Drilling machine.	-	4	-
17	Roller Vibratory Min. 10T	-	2	-
18	Welding set.	-	5	-

Sr.No.	Equipment owned/access to	Requirements (No.)		
		Regular and Routine works	New and Original Works	For other special works
1	2	3	4	5
19	Compressor	-	4	-
20	Transit Mixer (Tilted)	-	2	-
21	J.C.B.	-	2	-
22	Excavator / Poclain	-	1	-
23	Dumper / Trucks 8 Cu.m capacity	-	4	-
24	Dumper / Trucks 4 Cu.m capacity	-	4	-
25	C.C.T.V. Camera	-	1	-
26	Mobile D.G.set	-	2	-
27	Plate Vibrator	-	3	-
28	Flow meter	-	1	-
29	Open body trailer	-	1	-

~~a) **Regular and Routine works**: The successful bidder will make the arrangements of the required equipment on the day of commencement or with respect to the progress of the work in phases, as per the instructions of site in charge. The successful bidder and, to that effect he will ensure commitment on an undertaking on Rs.500 stamp paper to be submitted along with the Bid in Packet B. However, this condition in no way shall dilute the respective condition in Registration Rules of BMC.~~

b) **New and Original Works**: The bidder should, undertake their own studies and **furnish with their bid,** a detailed construction planning and methodology supported with assessment study of requirements of equipment/plants & machineries to allow the employer to review their proposal. The bidder will ensure his commitment to make the arrangements of the required equipment on the day of commencement or with respect to the progress of the work in phases, as per the instructions of site in charge on an undertaking on Rs.500 stamp paper to be submitted along with the Bid in Packet B. However, this condition in no way shall dilute the respective condition in Registration Rules of BMC.

c) ***Special Works****: The concerned Ch.Eng. shall enlist the equipments in the tender document justified for the project and ensure the capacity of the bidder for the same with the approval of concerned AMC.*

Note:

1. **Bidders shall submit the undertaking for equipment capability and other undertakings as such on a single Rs.500/- stamp paper.-**

6.8 Technical Personnel

(A) General Guidelines for Fixing Requirement of Technical Staff

Cost of work (Rs in Crore)	Requirement of Technical Staff (of Major +Minor Component)		Minimum Experience(years)	Designation
	Qualification	Number		
More than 50 to 100	i) Graduate Engineer	1	20	Project Manager
	ii) Graduate Engineer	1 + 1	12	Deputy Project Manager
	iii) Graduate Engineer OR Diploma Engineer	2 + 1	5 OR 10	Project/ Site Engineer
	iv) Graduate Engineer	1	8	Quality Engineer
	v) Diploma Engineer	1	8	Surveyor
	vi) Graduate Engineer	1 + 1	6	Project Planning/ Billing Engineer
More than 20 to 50	i) Graduate Engineer	1	20	Project Manager
	ii) Graduate Engineer Or Diploma Engineer	1 + 1	5 Or 10	Project/Site Engineer
	iv) Graduate Engineer	1	8	Quality Engineer
	v) Diploma Engineer	1	8	Surveyor
	vi) Graduate Engineer	1	6	Project Planning/ Billing Engineer
10 to 20	**i) Project Manager with degree in corresponding discipline of Engineering**	**1**	**10**	**Principal Technical Representative**
	ii) Graduate Engineer	**1**	**5**	**Technical Representative**
	iii) Graduate Engineer or Diploma Engineer	**2** **2**	**2** **5**	**Project/Site Engineer and Project Planning/ billing Engineer**
	Micro tunneling Equipment Operators. The Applicant must have suitably experienced personnel to operate the micro tunneling equipment in soft and hard ground including extra-ordinary hard rock and varying strata. The Applicant will supply information on master	**1**	**3**	

Cost of work (Rs in Crore)	Requirement of Technical Staff (of Major +Minor Component)		Minimum Experience(years)	Designation
	operator and assistant operators and their alternates. The prime and assistant operators shall be available throughout the construction period and should meet the experience requirements specified below:- (i) Master Operator (3 years exp) The master operator or the alternate shall have driven micro tunneling machines of over 1200 mm dia. (similar to the tunneling equipment proposed for the project) for a length of at least 500m including in hard ground or rock and varying ground conditions.			
	(ii) Assistant Operators (2 years exp) The assistant operators shall have driven micro tunneling machines of over 1200 mm dia (similar to the tunneling equipment proposed for the project) for a length of at least 300m including in hard ground or rock and varying ground conditions. The tenderers shall note that the experience of the operators shall clearly show the length of tunneling done by them in addition to the experience in number of years.	1	2	
	(iii) Track level measuring staff		As per requirement	
5 to10	i) Graduate Engineer	1	5	Principal Technical Representative

Cost of work (Rs in Crore)	Requirement of Technical Staff (of Major +Minor Component)		Minimum Experience(years)	Designation
	ii) Graduate Engineer or Diploma Engineer	2	2	Project/ Site Engineer
		2	5	Billing Engineer
More than 1.5 to 5	i) Graduate Engineer	1	5	Principal Technical Representative
	ii) Graduate Engineer or Diploma Engineer	1	2	Project/Site Engineer
		1	5	Billing Engineer
Up to1.5	i) Graduate Engineer or Diploma Engineer	1	2	Principal Technical Representative
		1	5	Project/Site Engineer/ Billing Engineer

Notes- 1. "Cost of work**"**, in table above, shall mean the agreement amount of the work..

2. Rate of recovery in case of non-compliance of the clause be stipulated at following rates:-

Sr. No	Qualification	Experience(years)	Rate of Recovery
1	Project Manager with degree	20	Rs.60000/-p.m.
2	Deputy Project Manager with degree	12	Rs.40000/-p.m.
3	Project/Site Engineer (Degree/Diploma)	5 or 10 respectively	Rs.25000/-p.m.
4	Quality Graduate Engineer	8	Rs.25000/- p.m.
5	Surveyor	8	Rs.15000/- p.m.
6	Project Planning/ Billing Engineer	6	Rs.20000/- p.m.
7	Safety Engineer (Degree/Diploma)	2 Or 5 respectively	Rs.20000/-p.m.

3. Nothing extra need to be added while preparing market rate justified amount of the work if stipulation is made as per above recommended scale of technical staff.

4. Requirement of technical staff and their experience can be varied depending upon cost and complexity of the work by competent authority i.e. Chief Engineer with recorded reasons.
5. The failure in providing experienced technical and /professional ability personnel and even ignoring the instruction of the Engineer-in-charge shall be linked to penalization. Such disobeying attitude of the contractor shall also be reported to Vigilance/Registration & Monitoring department

6.9 TIME PERIOD OF THE PROJECT:

Entire project should be completed and delivered **within 18 Months (Excluding of Monsoon)**of time from the date of award of contract that **excludes monsoon**. The time allowed for carrying out the work as entered in the Tender shall be strictly observed by the Contractor and shall be reckoned from the date on which the Letter of Acceptance is given to the Contractor. The work shall throughout the stipulated period of the Contract be proceeded with all due diligence as time being deemed to be the essence of the contract on the part of the Contractor. On failing to do so, the Contractor shall pay as compensation an amount which shall be governed as per Clause - 8(e) of Standard General Conditions of Contract.

The Contractor should complete the work as per phase given below :

¼ of the work in ¼ of the time

½ of the work in½ of the time

¾ of the work in¾ of the time

Full of the work in Full of the time

Full work will be completed in **18 months** excluding monsoon.

The programme for completion of work shall be a part of the Contract Document in the form of Bar Chart / Gantt chart. The Contractor is supposed to carry out the work and keep the progress as per Bar Chart/GANTT Chart. The Contractor shall complete the work as per the Schedule given in the Contract and special condition the programme submitted by the Contractor.

6.10 Contract Execution

All required documents for execution of the contract shall be submitted within 30 days from the date of issue of letter of acceptance. If the documents are not submitted within the stipulated time a penalty of **Rs 5000/- per day** will be applicable to the contractor. All contract documents need to be duly affixed with stamp duty properly signed along with evidence/proof of payment of security/contract deposit/ within 30 days from the date of letter of acceptance received by him.

6.11 If the amount of the Contract Deposit to be paid above is not paid within **30 days** from the date of issue of Letter of Acceptance, the Tender / Contractor already accepted maybe considered as cancelled and legal steps be taken against the contractor for recovery of the amounts.

6.12 The amount of Security Deposit retained by the BMC shall be released after expiry of period up to which the contractor has agreed to maintain the work in good order is over. In the event of the contractor failing or neglecting to complete the rectification work within the period up to which the contractor has agreed to maintain the work in good order, the amount of security deposit retained by BMC shall be adjusted towards the excess cost incurred by the Department on rectification work.

6.13 Action when whole of security deposit is forfeited:

In any case in which under any Clause of this contract, the contractor shall have rendered himself liable to pay compensation amounting to the whole of this security deposit whether paid in one sum or deducted by instalments or in the case of abandonment of the work owning to serious illness or death of the contractor or any other cause, the Engineer on behalf of the Municipal Commissioner shall have power to adopt any of the following process, as he may deem best suited to the interest of BMC -

(a) To rescind the contract (for which recession notice in writing to the contractor under the head of Executive Engineer shall be conclusive evidence) and in that case, the security deposit of the contract shall stand forfeited and be absolutely at the disposal of BMC.

(b) To carry out the work or any part of the work departmentally debiting the contractor with the cost of the work, expenditure incurred on tools and plant, and charges on additional supervisory staff including the cost of work-charged establishment employed for getting the un-executed part of the work completed and crediting him with the value of the work done departmentally in all respects in the same manner and at the same rates as if it had been carried out by the contractor under the terms of his contract. The certificate of the Executive Engineer as to the costs and other allied expenses so incurred and as to the value of the work so done departmentally shall be final and conclusive against the contractor.

(c) To order that the work of the contractor be measured up and to take such part thereof as shall be un-executed out of his hands, and to give it to another contractor to complete, in which case all expenses incurred on advertisement for fixing a new contracting agency, additional supervisory staff including the cost of work charged establishment and the cost of the work executed by the new contract agency will be debited to the contractor and the value of the work done or executed through the new contractor shall be credited to the contractor in all respects and in the same manner and at the same rates as if it had been carried out by the contractor under the terms of his contract. The certificate of the Executive Engineer as to all

the cost of the work and other expenses incurred as aforesaid for or in getting the un-executed work done by the new contractor and as to the value of the work so done shall be final and conclusive against the contractor.

In case the contract shall be rescinded under Clause (a) above, the contractor shall not be entitled to recover or be paid any sum for any work there for actually performed by him under this contract unless and until the Executive Engineer shall have certified in writing the performance of such work and the amount payable to him in respect thereof and he shall only be entitled to be paid the amount so certified. In the event of either of the courses referred to in Clause (b) or (c) being adopted and the cost of the work executed departmentally or through a new contractor and other allied expenses exceeding the value of such work credited to the contractors amount of excess shall be deducted from any money due to the contractor, by BMC under the contract or otherwise, howsoever, or from his security deposit or the sale proceeds thereof provided, however, the contractor shall have no claim against BMC even if the certified value of the work done departmentally or through a new contractor exceeds the certified cost of such work and allied expenses, provided always that whichever of the three courses mentioned in clauses (a), (b) or (c) is adopted by the Executive Engineer, the contractor shall have no claim to compensation for any loss sustained by him by reason of his having purchase or procured any materials or entered in to any engagements or made any advance on account of or with a view to the execution of the work or the performance of the contract.

6.14 <u>Contract may be rescinded, and security deposit forfeited for bribing a public officer or if contractor becomes insolvent.</u>

If the contractor assigns or sublets his contracts or attempt so to do, or become insolvent or commence any proceeding to get himself adjudicated and insolvent or make any composition with his creditors, or attempt so to do or if bribe, gratuity, gift, loan, perquisite, reward or advantage, pecuniary or otherwise, shall either directly or indirectly be given promised or offered by the contractor or any of his servants or agents through any public officer, or person in the employ of BMC/Govt. in any way relating to his office or employment, or if any such officer or person shall become in any way directly or indirectly interested in the contract the Engineer In-charge may thereupon, by notice in writing rescind the contract and the Security Deposit of the Contractor shall thereupon stand forfeited and be absolutely at the disposal of BMC and the same consequences shall ensure as if the contract had been rescinded under above clause J hereof; and in addition the contractor shall not be entitled to recover or be paid for any work therefore actually performed under the contract.

6.15 Submission of Tenders

PACKET – A

The Packet 'A' shall contain scanned certified copies of the following documents

Scrutiny of this packet will be done strictly with reference to only the scanned copies of Documents uploaded online in packet 'A'

a) Valid Registration Certificate.

b) Valid Bank Solvency Certificate of Minimum Solvency amount as governed by Registration Rules in force for respective Class of Contractor for Civil and M&E works.

c) A document in support of registration under "The Central Goods and Services Tax (GST) Act 2017'.

d) Certified copies of valid 'PAN' documents and photographs of the individuals, owners, Karta of Hindu undivided Family, firms, private limited companies, registered co-operative societies, partners of partnership firms and at least two Directors, if number of Directors are more than two in case of Private Limited Companies, as the case may be. However, in case of Public Limited companies, Semi Government Undertakings, Government Undertakings, no 'PAN' documents will be insisted.

e) Latest Partnership Deed in case of Partnership firm duly registered with Chief Accountant (Treasury/WSSD/Finance) of BMC.

f) The Registered power of attorney shall be submitted in the name of person who is submitting the bid.

g) The bidders shall categorically provide their Email-ID in packet 'A'.

h) Scan copy of online paid EMD receipt.

NOTE:

- **If the tenderer(s) withdraw tender offer during the tender validity period, his entire E.M.D shall be forfeited.**
- **If it is found that the tenderer has not submitted required curable documents in Packet "A" then, the shortfalls will be communicated to the tenderer through e-mail only and compliance required to be made within a time period of three working days otherwise they will be treated as non-responsive.**

PACKET – B

The Packet 'B' shall contain scanned certified copies of the following documents –

a) The list of similar type of works as stated in para 'A' (Clause No. 2.1) of Post qualification successfully completed during the last Seven (07) years in prescribed proforma, in the role of prime contractor. Information furnished in the prescribed Proforma(**Proforma – I**) shall be supported by the certificate duly self-attested. Documents stating that it has successfully completed during the last Seven (07) years at least one contract of similar works as stated in para 'A' of Post qualification.

b) Annual financial turnover for **preceding three financial years as certified by Chartered Accountant** preceding the Financial Year in which bids are invited.**Copies of Applicants duly audited balance sheet and profit and loss account for the preceding three financial years preceding the Financial Year in which bids are invited.** (**Proforma – II**).

c) List of similar works as per Proforma.(**Proforma – III).**

d) Documents stating that, it has access to or has available liquid assets, unencumbered assets, lines of credit and other financial means (independent of any contractual advance payment) sufficient to meet the construction cash flow requirements for the subject contract in the event of stoppage, start-up, or other delay in payment, of the minimum **15%** of the cost of the work tendered for, net of the tenderer's commitment of other contracts (Certificate from Bankers / C.A./Financial Institution shall be accepted as a evidence).

e) The bidder shall give undertaking on Rs 500/-stamp paper that it is his/their sole responsibility to arrange the required machineries either owned/on lease or hire basis, at site before start of the work **(as per Proforma – V& VIII).**

~~**i) Regular and Routine works**: The successful bidder shall make the arrangements of the required equipment on the day of commencement or with respect to the progress of the work in phases, as per the instructions of site in charge. The successful bidder and, to that effect he will ensure commitment on an undertaking on Rs.500 stamp paper to be submitted along with the Bid in Packet B. However, this condition in no way shall dilute the respective condition in Registration Rules of BMC.~~

ii) New and Original Works: The bidder should, undertake their own studies and **furnish with their bid,** a detailed construction planning and methodology supported with assessment study of requirements of equipment/plants & machineries to allow the employer to review their proposal. The bidder shall ensure his commitment to make the arrangements of the required equipment on the day of commencement or with respect to the progress of the work in phases, as per the in-

structions of site in charge on an undertaking on Rs.500 stamp paper to be submitted along with the Bid in Packet B. However, this condition in no way shall dilute the respective condition in Registration Rules of BMC.

f. The list of the 'Technical Personnel's with their qualification, working in the tenderer's establishment as per **Proforma IV**.

g. Details of works in hand and for which bid already submitted **(Proforma VI-A & VI-B)** (original), along with copies of work orders & attested copies of percentage of works completed or part thereof.

h. Statement showing assessed available Bid Capacity.

i. The undertakings on Rs.**500/- stamp paper** as per the Proforma annexed in Annexure **B** (Pre-Contract Integrity pact), **C** (Indemnity bond),**E** (Best price) and Annexure **I** (Irrevocable Undertaking).

j. Undertaking on Rs.500/- stamp paper stating that tenderer is conversant to all site situation and difficulty & has inspected the site personally and accordingly bid is submitted.

k. Annexure**- G** and Annexure- **H**

l. Tenderer shall submit the undertaking stating that he will submit license certificate from the office of Labour Commissioner as stated in clause no 6.32, after issue of work order and before commencing the work, if the work is allotted to him.

m. Details of litigation history in which tenderer is involved (Proforma IX) for last five years from the date of submission of bid as per directions given in the circular u/no. MGC/F/6565 dated 25.09.2018.

n. Details of certificate issuing Authorities in **(Proforma X**).

o. Pre bid meeting minutes, signed copy of Addendum/ corrigendum if any.

p. The tenderers shall upload work plan as per the following outline:

1) GANTT chart/ PERT/ CPM chart showing the completion of work within prescribed time period, considering major activities.
2) Organizational set up envisaged by the contractors.
3) Plant & equipment proposed to be deployed for this work.
4) Site Offices and Laboratories proposed to be set up.
5) A note on how the whole work will be carried out (work plan including methodology).
6) Quality management plan.
7) All the activities included in the Scope of Work shall be covered in the work plan.

q. Annexure for Grievance Redressal Mechanism signed copy

r. Signed copy of 'Form of the tender' / Status of Tender / Annexue 'A' / Specifications of works if any and the schedule of rates.

Note:

i. **Bidders shall submit the undertaking for equipment capability and other undertaking as such on a single Rs.500/- stamp paper.**

ii. The Electrical / Mechanical work shall be got carried out by the civil contractors through the contractors registered with BMC in Electrical Category. Information about the registered contractors shall be obtained from the office of the Ch.E. (M&E)/ E.E. (Monitoring & Registration Cell). Attested scanned copy of the valid registration certificate in Electrical Category shall be uploaded with the tender along with the undertaking from the registered Electrical Contractor stating his willingness to carry out the tender work.

iii. The successful bidder shall submit valid registration certificate under E.S.I.C., Act 1948, if the tenderer has more than 10 employees /persons on his establishment (in case of production by use of energy) and 20 employees/persons on his establishment (in case of production without use of energy) to BMC as and when demanded. In case of less employees/persons mentioned above then the successful bidder has to submit an undertaking to that effect on Rs. 500 stamp paper as per circular u/no. CA/FRD/I/65 of 30.03.2013.

iv. The successful bidder shall submit valid registration certificate under E.P.F. & M.P., Act 1952, if tenderer has more than 20 employees/persons on his establishment, to BMC as and when demanded. In case if the successful bidder has less employees/persons mentioned above then the successful bidder has to submit an undertaking to that effect on Rs. 500 stamp paper as per circular u/no. CA/FRD/I/44 of 04.01.2013.

v. The successful bidder shall submit the **signed form of the tender**, specification of works if any, **Annexure "A"** and the schedule of rates.

vi. **If it is found that the tenderer has not submitted required curable documents in Packet "B" then, the shortfalls will be communicated to the tenderer through e-mail only and compliance required to be made within a time period of three working days otherwise they will be treated as non-responsive.**

PACKET – C

a. Online tender filled in percentage either plus or minus (Excess or less). There is no separate provision to quote % in physical form for packet 'C', tenderers will fill data in 'Financial' folder during the submission of the bid.

As per circular u/no. CA/Finance/Project/City/28 dt. 10.11.2017, the condition for submission of Special Annexure-I is deleted.

Note:1) In case of rebate/premium of 15% and above as quoted by the tenderer, the rate analysis of major items shall be submitted by L1 and L2 bidder after demand notification by e-mail to bidders by concerned E.E.W.W.(Const). The format for rate analysis is annexed at Annexure D.

2) Rate analysis in prescribed format shall be submitted online to the engineer in charge within 3 working days from the date of communication on email, failing which EMD will be forfeited, and the bid will be rejected, and the next Successful /Responsive bidder will be considered thereafter, negotiation will be done with the said successive/responsive bidder with respect to his quoted rate.

6.16 BID SECURITY OR EMD

1. The Bidder shall furnish, as part of the Bid, Bid Security/EMD, in the amount specified in the Bid Data Sheet. This bid security shall be in favor of the authority mentioned in the Bid Data Sheet and shall be valid till the validity of the bid.

2. The tenderer shall pay entire amount of EMD/Bid Security as specified in the bid amounting through online payment gateway of GOM on URL https://mahatenders.gov.in. The bidder shall upload scan copy of online paid EMD along with the bid submission in Packet A as per the direction given in the circular u/no. CA/Finance/Project/19 dated 04.03.2024.

3. Any bid not accompanied by an acceptable Bid Security and not secured as indicated in sub-clause mentioned above, shall be rejected by the Employer as non-responsive.

4. The Bid Security/ EMD of the successful bidder will be discharged when the bidder has signed the agreement and furnished the required security Deposits.

5. Except successful bidder all other unsuccessful bidder's 100% EMD paid online will be refunded automatically after completion of Award of Contract (AOC) procedure in Mahatenders portal.

6. ~~ASD of L-2 and other higher bidders (L-3, L-4, etc.) shall be refunded immediately after opening of financial bid.~~

The Bid Security may be forfeited:

a. If the Bidder withdraws the Bid after bid opening (opening of technical qualification part of the bid during the period of Bid validity);

b. In the case of a successful Bidder, if the Bidder fails within the specified time limit to:

   i. sign the Agreement; and/or

   ii. Furnish the required Security Deposits.

c. In case of non workable rate analysis and misleading information submitted by the bidder, EMD shall be forfeited and bid will be rejected.

1. The cases wherein if the curable shortfalls are not complied by a contractor, will be informed to Registration and Monitoring Cell. Such non-submission of documents will be considered as 'Intentional Avoidance' and if three or more cases in 12 months are reported, shall be viewed seriously and disciplinary action against the defaulters such as banning/de-registration, etc. shall be taken by the registration cell with due approval of the concerned AMC

2. Maximum **5 shortfalls of curable defects in packet A & packet B shall be allowed** and in case, curable defects are not complied by bidder, within given time period, the bidder shall be treated as '**Non-Responsive'**& such cases will be informed to Registration and Monitoring cell. Such non –submission of documents will be considered as 'Intentional Avoidance' and if three or more cases in 12 months are reported, shall be viewed seriously and disciplinary action against the defaulters such as banning/de-registration, etc. shall be taken by Registration cell with due approval of concerned AMC as per the direction given in the circular u/no. CA/Finance/Project/19 dated 04.03.2024

i) Curable Defect shall mean shortfalls in submission such as:

a. Non-submission of following documents,

I. Valid Registration Certificate

II. Valid Bank Solvency

III. Sales Tax Registration Certificate (VAT) / Central Goods and Services Tax (GST) registration certificate.

IV. Certified Copies of PAN documents and photographs of individuals, owners, etc.

V. Partnership Deed and any other documents.

VI. Undertakings as mentioned in the tender document.

VII. Wrong calculations of Bid Capacity

ii) Non-curable Defect shall mean

a. In-adequate submission of EMD/~~ASD~~ amount,

b. In-adequacy and non-submission of technical and financial capacity with respect to Eligibility criteria as stipulated in the tender.

c. No proper submission of experience certificates and other relevant documents, etc.

6.17 BID VALIDITY

a) Bids shall remain valid for a period of not less than one eighty (180) days after the deadline date for bid submission specified in Bid Data Sheet. A bid valid for a shorter period shall be rejected by the Employer as non-responsive.

b) In exceptional circumstances, prior to expiry of the original time limit, the Employer may request that the bidders may extend the period of validity for a specified additional period. The request and the bidders' responses shall be made in writing or by cable. A bidder may refuse the request without forfeiting his Bid Security. A bidder agreeing to the request will not be required or permitted to modify his bid, but will be required to extend the validity of his bid security for a period of the extension.

6.18 DEFECT LIABILITY PERIOD

i) The Contractor is expected to carry out the construction work in Workmen like manner so as to meet the requirement and specification for the project. It is expected that the Workmanship and materials will be reasonably fit for the purpose for which they are required.

j) Defects or defective work is where standard and quality of workmanship and materials as specified in the contract is deficient. Defect is defined as a failure of the completed project to satisfy the express or implied quality or quantity obligations of the construction contract. Defective construction works are as the works which fail short of complying with the express descriptions or requirements of the contract, especially any drawings or specifications with any implied terms and conditions as to its quality, workmanship, durability, aesthetic, performance or design. Defects in construction projects are attributable to various reasons.

k) Some of the defects are structural defects results in cracks or collapse of faulty defective plumbing, inadequate or faulty drainage system, inadequate or faulty ventilation, cooling or heating systems, inadequate fire systems etc. The defects could be various on accounts of different reasons for variety of the projects.

l) The Engineering In charge/Project Officer shall issue the practical completion certificate for the project. During the Defect Liability Period which commences on completion of the work, the

Engineering In charge shall inform or the contractor is expected to be informed of any defective works by the Employer's representative of the defects and make good at contractor's cost with an intention of giving opportunity to the contractor of making good the defects appeared during that period. It is the contractor's obligation under the contract to rectify the defects that appear during Defect Liability Period and the contractor shall within a reasonable time after receipt of such instructions comply with the same at his own cost. The Engineering In charge/Project Officer shall issue a certificate to that effect and completion of making good defects shall be deemed for all the purpose of this contract to have taken place on the day named in such defect liability certificate.

m) If defective work or workmanship or design have been knowingly covered-up or conceived so as to constitute fraud, commencement of the Defect Liability Period may be delayed. The decided period may be delayed until discoveractually occurs on at least the defect could have been discovered with reasonable diligence, whichever is earlier.

n) The DLP shall be as below:

Dept.	**Type of works**	**DLP**
~~**Roads / Bridge**~~	~~For cement concrete road/ Mastic works~~	~~5 years~~
	~~Asphalt work~~	~~3 years~~
	~~Paver Block~~	~~3 years~~
	~~Structural work~~	~~5 years~~
	~~General works~~	~~5 years~~
~~**BM/SIC/HIC**~~	~~General works~~	~~3 years~~
	~~Structural works~~	~~5 years~~
	~~Waterproofing works~~	~~5 years~~
~~**Ward Works**~~	~~All ward level works~~	~~2 years~~
~~**Other Works**~~	~~Pot holes and pre monsoon bad patch repair work~~	~~1 year~~
For other departments	~~WSP, SP, SWD, Garden~~	~~3 year~~
H.E. Deptt.	~~1. For laying of CI/DI/MS/MDPE WM upto and including 300mm dia. and allied works as specified~~	~~1 year~~
	2. For work of laying of water main of size more than 300mm diameter and allied works as specified	**3 years**

Dept.	Type of works	DLP
	~~3. Leakage & contamination & allied works including reinstatement works~~	~~1 year~~
	~~4. Renewal of service connections~~	~~1 year~~
	~~5. Removal of bunch of connection~~	~~1 year~~
	~~6. Repair/ construction of valve chambers~~	~~1 year~~
	~~7. A) For R.C.C. works underground~~ ~~B) For water proofing work of Underground Suction Tank~~	~~5 years~~ ~~5 years~~
	~~8. For separate independent tender for road/ trench works like:~~ ~~Asphaltmix~~ ~~Paverblock~~ ~~C. C. road~~	 ~~3years~~ ~~3years~~ ~~5years~~
	DLP of Trenching Reinstatement work for various Activities (As per RI tender floated by road department for reinstatement of trenches taken by various external & internal utilities in greater Mumbai Z-I to Z-III)	
	1.For Asphalt Work	**3years**
	2.Paver Blocks	**3years**
	3.Mastic Works	**3 years**
	4.UTWT/TWT Works	**3 years**
	5.CC Passage/CC Side strip	**3 years**
	6.CC Road	**3 years**

❖~~The above is illustrative. In case of any type of work not covered in above or any change in DLP, the concerned Ch. Eng. shall stipulate DLP with approval of concerned DMC/AMC.~~

❖~~In case of composite works i.e. having combinations of construction activities of different disciplines, the DLPs shall be approved by AMC.~~

o) Also, in case of defect, the Engineer shall give notice to the Contractor of any Defects before the end of the Defects Liability Period, which begins at. The Defects Liability Period shall be extended for as long as Defects remain to be corrected. Every time notice of Defect/Defects is

given, the Contractor shall correct the notified Defect/Defects within the duration of time specified by the Engineer's notice. The Engineer may issue notice to the Contractor to carry out removal of defects or deficiencies, if any, noticed in his inspection, or brought to his notice. The Contractor shall remove the defects and deficiencies within the period specified in the notice and submit to the Engineer a compliance report.

p) It is the Completion Stage when the contractor has completed all of the works and fixed all of the defects that were on the list of issue by Engineer-in-charge. When this happens, the engineer must issue a 'Certificate of Completion'. On the issue of 'Certificate of Completion', the 'Defect Liability Period 'starts. The contractor also must issue a 'Certificate statement' as an acknowledgment to the engineer not later than 14 days after the 'Certificate of Completion' has been issued. During the 'Defect Liability Period', the contractor has to obey all written instructions from the engineer to carryout repairs and fix any defects which appear in the Permanent Works. If the contractor does not ,due to his own faults finish the repair works or fix the defects by the end of 'Defect Liability Period', the 'Defect Liability Period' will continue until all works instructed by engineer is done.

q) In case of any lapse in maintenance, the penalties shall be recovered and if necessary the work shall be got done at the risk and cost of the contractor after the prescribed period. The said cost shall be recovered from the Contract Deposit /Retention money or any other deposits, dues with the B.M.C. The contractor shall be liable to pay the excess cost if incurred, punitive damages and face penal action in the case of insufficiency of the aforesaid amount.

6.19 SECURITY DEPOSIT AND PERFOMANCE GUARANTEE

A. Security Deposit

The security deposit shall mean and comprise of

I) Contract Deposit and

II) Retention Money.

I) Contract Deposit – The successful tender, here after referred to as the contractor shall pay an amount equal to two percent (2%) of the contract sum shall be paid within thirty days from the date of issue of letter of acceptance. The said contract deposit shall be can be in the form of Demand draft (D.D) / Bank Guarantee.

II) Retention Money – The retention money equal to (5%) Five percent of the Contract Sum, which will be recovered from the contracts or every bill i.e. interim / running / final bill.

The clause of retention money will not be applicable for M & E dept.

B. Additional Security Deposit

(As per Circular u/no. C.A.(F.)/Project/04 dated 08.07.2026 copy at pg. no. 316 to 318)

Sr. No.	For the quoted rate of rebate by the bidder is between	A.S.D. Applicable
A	Up to **12.00% rebate**	No ASD
B	12.01% to 20.00% rebate	**1% of Estimated Cost** for each percentage and part thereof above **12% rebate** For e.g.: - Rebate quoted (-)18.06% ASD = (18.06 - 12) x 1% x Estimated Cost
C	20.01% rebate & above	**1% of Estimated Cost** for each percentage and part thereof above **12% upto 20% rebate (i.e. 8%)**, + **2% Extra** for each percentage and part thereof over and above **20% rebate** For e.g.: - Rebate quoted (-)24.70% ASD = (8% + [(24.70% - 20%) x 2]) x Estimated Cost

Payment of A.S.D.: Along with LOA, the Department shall issue challan of the requisite amount of ASD to be deposited by the contractor.

The ASD is to be submitted within 15 working days after issue of LOA in the form of Demand Draft at the CFC Counter and submit copy of the receipt to the concerned HOD. If the requisite ASD is not submitted within 15 working days after issue of LOA, 10% EMD shall be forfeited. If the requisite ASD is not submitted within 30 working days after issue of LOA, 100% EMD shall be forfeited and the bidder/company shall be debarred for a period of two years. Also, if any Director/Partner of such company is functioning as Director/Partner in any other company, that company shall also be liable for debarment for two years. Further, the work awarded shall be terminated/revoked.

C. Performance Guarantee

The successful tender, here after referred to as the contractor shall pay in the form of "Performance Guarantee" at different rates for different slabs as stated below:

Offer	PG applicable %
For premium, at par and rebate 0 to 12%	PG= 0.92% x contract sum **applicable for rebate of 12**%
For rebate of 12.01% and above	P.G. = {0.92% x contract sum applicable for rebate of 12%} +(X) x contract sum Where X= percentage rebate quoted more than 12%

Note: Contract sum shall mean amount after application of rebate/premium as quoted by the contractor with physical contingencies only and excluding price variation.

The PG shall be paid in one the following forms.

I) Cash (In case guarantee amount is less than Rs.10,000/-

II) Demand Draft (In case guarantee amount is less than Rs.1,00,000/-)

III) Government securities

IV) Fixed Deposit Receipts (FDR) of a Schedule Bank.

V) An electronically issued irrevocable bank guarantee bond of any Schedule bank or f in the prescribed form given in Annexure.

Performance Guarantee is applicable over and above the clause of Security Deposit. Performance Guarantee will have to be paid & shall be valid till the defect liability period or finalization of final bill whichever is later.

Performance Guarantee shall be submitted separately for different DLP's of the work as mentioned in ANNEXURE 'A'. Amount of P.G. will be work out on the basis of proportionate cost of the work as per the DLP of that particular work.

This deposit will be allowed in the form of I to V as mentioned above and shall be paid within 15 days after receipt of Letter of Acceptance.

Note: Following exceptions shall be adopted for 'Demolition Tenders':

i. Irrespective of the offer (Rebate/ at par/ premium), ASD shall be differed and only PG of 10% of contract sum be taken from the successful bidder on award of contract only.

ii. BMC departments shall ensure to incorporate specific condition regarding above in bid document and e-tender notice.

D. Refund of Security Deposit

I. Refund of Contract Deposit

The Contract Deposit shall be released within 30 days after completion of 3rd year of DLP (in case of 5 years DLP) and after issue of 'Defect Liability Certificate' (in case of 1 or 2 or 3 years DLP) subject to no recoveries are pending against the said work, provided that the Engineer is satisfied that there is no demand outstanding against the Contractor. No claim shall be made against the Balance Contract Deposit after the issue of Defects Liability Certificate.

II. Refund of Retention Money

The Retention Money will be refunded after completion of defect liability period and after issue of "Defect Liability Certificate" (in case of 1 or 3 or 5 years DLP) provided that the Engineer is satisfied that there is no demand outstanding against the Contractor. In the event of different Defects Liability Periods have been specified or become applicable to different sections or parts of the Permanent Works, the said money will be released within

30 days on expiration of such Defects Liability Periods. In the event the Engineer issues a Taking-over Certificate for a section or part of the Permanent Works, only such proposition thereof as the Engineer determines (having regard to the relative value of such section or part of the Works) shall be considered by the Engineer for payment to the Contractor.

III. Refund of Additional Security Deposit

(As per Circular u/no. C.A.(F.)/Project/04 dated 08.07.2026 copy at pg. no. 337 to 339)
The Additional Security Deposit shall be released within 30 days of issue of Certificate of Completion with respect to the whole of the works. In the event the Engineer issues a Taking - over Certificate for completed works having separate WBS element, only such portion shall be considered for payment to the Contractor.

IV. Refund of Performance Guarantee

The Deposit on account of performance guarantee shall be released within 30 days of completion of Defects Liability Certificate subject finalization of final bill whichever is later and no recoveries are pending against the said work, provided that the Engineer is satisfied that there is no demand outstanding against the Contractor.

❖ Summary of time of Refund of deposit is tabulated as follows:

~~a) Time of Refund for works having 5 years DLP~~

~~Deposits refunded after 50% of financial progress~~	~~Deposits refunded after completion~~	~~After 3 yrs of DLP~~	~~After Completion of DLP~~
~~50% ASD~~	~~50% ASD~~	~~CD~~	~~RM+PG~~

b) Time of Refund for works having 1 or 2 or 3 years DLP

Deposits refunded after 50% of financial progress	Deposits refunded after completion	After Completion of DLP
-	100% ASD	CD+ RM+PG

***Note:**

a) It shall be clearly mentioned that the BG shall be applicable for individual work/contract and clubbing of various contracts of the said contractor will not be allowed. In case of obtaining Bank Guarantee, it is necessary to mention that the same shall be valid further 6 months from the completion of defect liability period/ warranty period.

b) It shall be the responsibility of the bidder to keep the submitted B.G. "VALID" for the stipulated time period in the tender & in case of its expiry it will attract penalization.

c) Bank Guarantee should be issued by way of General Undertaking and Guarantee issued on behalf of the Contractor by any of the Nationalized or Scheduled banks or branches of foreign banks operating under Reserve Bank of India regulations located in Mumbai up to Virar & Kalyan. List of approved Banks is appended at the end of Instructions to Bidders (ITB). The Bank Guarantee issued by branches of approved Banks beyond Kalyan and Virar can be accepted only if the said Bank Guarantee is countersigned by the Manager of a Regional Branch of the same bank within the Mumbai City Limit categorically endorsing thereon that the said Bank Guarantee is binding on the endorsing Branch of the Bank or the Bank itself within Mumbai Limits and is liable to be enforced against the said Branch of the Bank or the bank itself in case of default by the Contractors furnishing the Bank Guarantee. The Bank Guarantee shall be renewed as and when required and/or directed from time to time until the Contractor has executed and completed the works and remedied any defects therein.

E. <u>Legal + Stationary Charges: (As per applicable circular)</u>(at pg. no. 286 to 287)

Successful tender shall pay the Legal Charges +Stationary charges as per Circular/26206 dtd. 31.08.2023 of Legal department as amended as below. (Applicable G.S.T. will be recovered over these charges**)**

Contract Cost in Rs.		**Legal+ Stationery Charges from 01.09.2023 up to 31.03.2024**
up to	50,000/-	Nil
from	50,001/- to 1,00,00,000/-	At the rate of 0.10% of Contract Cost (with respect to rounding off such amount to next hundredth multiple) plus GST at the rate of 18 % (Minimum: Rs. 1000/- plus GST and Maximum: Rs. 10000/- plus GST)
from	1,00,00,001/- to 10,00,00,000/-	Rs. 10,000/- for Contract Cost up to Rs. 1,00,00,000/- plus At the rate of 0.05 % of Contract Cost amount greater than Rs. 1,00,00,000/- (with respect to rounding off such amount to next hundredth multiple) plus GST at the rate of 18 %
from	10,00,00,001/-& above	Rs. 55,000/- for Contract Cost up toRs. 10,00,00,000/- plus at the rate of 0.01 % of Contract Cost amount greater than Rs. 10,00,00,000/- (with respect to rounding off such amount to next hundredth multiple) plus GST at the rate of 18 %

The tenderers are requested to note that stationary charges as given in the table above will be recovered from the successful tenderer for supply of requisite prescribed forms for preparing certificate bills in respect of the work.

A. <u>Stamp Duty: (As per applicable circular)</u>(at pg. no. 290 to 293)

It shall be incumbent on the successful tenderer to pay stamp duty on the contract.

i. As per the provision made in Article 63, Schedule I of Maharashtra Stamp Act 1958, stamp duty is payable for "works contract" that is to say, a contract for works and labour or services involving transfer of property in goods (whether as goods or in some other form) in its execution and includes a sub-contract, as under :

(a)	Upto Rupees 5 lakhs	Rs.500/-
(b)	Above Rs.5 Lakhs Upto Rs.10 lakhs	Rs.500/- plus 0.30% of the amount above rupees Rs.5 Lakhs subject to maximum of R.25 Lakhs
(c)	Above Rs.10 Lakhs	Rs.500/- plus 0.30% of the amount above rupees Rs.5 Lakhs subject to maximum of R.25 Lakhs
(d)	Bank Guarantee: As per article 54 read with 40(b) of stamp duty act, stamp duty of 0.5% will be applicable to the all bank guarantee submitted also which are required to be renewed after expiry of time period.	

ii. The successful bidder within 30 days from the date of the work order for executing the contract work under reference shall enter into a contract agreement with the B.M.C by submitting the necessary / required documents to the satisfaction of the concerned Executive Engineer & Account Officer. The contract agreement shall be adjudicated for payment of stamp duty by the successful bidder and accordingly the successful bidder shall pay the stamp duty on the contract agreement within such time so as to ensure that the contract agreement is executed within the stipulated period as aforesaid. The cost worked out after adding the physical & cost contingencies shall be considered for computing the stamp duty charges to be paid for the contract agreement.

iii. Further shortfall if any, in amount of stamp duty paid as against prescribed amount for the documents executed in Mumbai City & Mumbai Suburban District be recovered from the concerned work contractors and to deposit the deficit or unpaid Stamp Duty and penalty by two separate Demand Draft or Pay Order in favour of "Superintendent of Stamp, Mumbai" within 15 days from intimation thereof.

iv. All legal charges and incidental expenses in this respect shall be borne and paid by the successful tenderer.

6.20 <u>IMPORTANT DIRECTIONS</u>

1. All the information uploaded shall be supported by the corroborative documents in absence of which the information uploaded will be considered as baseless and not accepted for qualification criteria. All the documents shall be uploaded with proper pagination. The page No. shall be properly mentioned in the relevant places.

   The information shall be uploaded in the sequence as asked for with proper indexing etc. The Bidder shall be fully responsible for the correctness of the information uploaded by him.
2. Applicants/Bidders shall refer portal.mcgm.gov.in\tenders for "The Manual of Bid-Submission for Percentage Rate/Item Rate Tender Document." The detail guidelines for creation and submission of bid are available in the referred document.

Any queries or request for additional information concerning this TENDER shall be submitted by e-mail to **eeconstcity.he@mcgm.gov.in**The subject shall clearly bear the following identification/ title: **"Queries/Request for Additional Information: Tender for (HE-C-CT-IMPRO-09**)

(HE-C-CT-IMPRO-09) Laying of 1200 mm dia. 2 nos of MS water carrier pipe through 1500 mm dia. (2 nos) MS casing pipe by Micro tunneling method below railway track at KM 13/250-285 near Mahim Railway station, Mahim G/North ward in Zone-II.

Any changes in mail ID will be intimated on the portal.

3. In case of **Equal Percentage** of lowest bidders (L1), the allotment of work shall be done by giving 48 hrs **(2 working days)** from the day of opening of packet C **on same BID-Document number for re-quoting** and such development needs to done by IT department. **Till such development is made; 'Sealed Bids' shall be called from the bidders quoting the same rates i.e. L1.**

   In case of equal percentage of lowest bidders is obtained even after re-quoting, then the successful bidder will be decided by lottery system by concerned Ch.Eng./H.E.

   The bidder shall need to submit the additional ASD if applicable within 7 days after receipt of notification issued by concerned Chief Engineer/ H.E.. Also, the Performance Guarantee shall be paid in 15 days after receipt of Letter of Acceptance.

6.21 GENERAL DIRECTIONS TO TENDERERS:

1. Firms with common proprietor / partner are connected with one another either financially or as master and servant or with proprietor / partner closely related to each other such as husband, wife,

father / mother and minor son / daughter and brother / sister and minor brother / sister, shall not tender separately under different name for the same contract.

2. If it is found that firms as described in clause 6.21.1 have tendered separately under different names for the same contract all such tenders shall stand rejected and tender deposit of each such firm /establishments shall be forfeited. In addition, such firms / establishments shall be liable, at the discretion of the Municipal Commissioner, for further penal action including blacklisting.
3. If it is found that closely related persons as in clause 6.21.1 have submitted separate tenders under different names of firms, establishment but with common address for such establishment / firms and / or if such establishment firms though they have different address, are managed or governed by the same person / persons jointly or severally such tender shall be liable for action as in clause 6.21.2 including similar action against firms / establishment concerned.

4. If after award of contract, it is found that the accepted tenderer violates any of the clauses, 6.21.1, 6.21.2, 6.21.3 the contract shall be liable for cancellation at any time during its currency in addition to penal action against the contractors as well as related firms / establishments.

5. Tenderers should note in addition to the official address, they should furnish private residential address, mobile nos., email ids of the partners. Any fault in this respect may justify the rejection of Tender.

6. In the event of tender being accepted, full amounts of contract deposit must be paid and contract must be signed by all the partners of the firm and if one or more partners be not available for the purpose, signatory must produce a Power of Attorney must be registered in the office of C.A (Finance) / C.A (Treasury) /C.A (WSSD).

7. In the case of a Joint Stock Company, the contract must be sealed with the seal of the company in the presence of and signed by the two Directors or by a person duly authorized to sign the contract for the Company by a power of attorney, such power being sealed and signed as aforesaid. All such power of attorney must be registered in the Municipal Office.

8. Tenderers must distinctly understand:

a) That they will be strictly required to conform to the conditions of this contract as contained in each of its clauses and that the plea of "custom prevailing" will not on any account be admitted as an excuse on their part for infringement of any of the conditions.

b) That no alternation or interpolation will be allowed to be made in any of the terms and conditions of this contract or in the Specification of in the Schedule, and that if any such alteration or interpolation be made by a Tenderer, his tender will, at the option of the Municipal Commissioner, either be rejected or to be treated as if no such alteration or interpolation has been made.

c) That the full contract deposit must be paid within the time specified and the contract must be executed within the stipulated time frame by the successful tenderer.

d) That a postponement of the payment of the full contract deposit or the execution of the contract will not be permitted by reason of the Corporation having in possession other deposits on account of other tenders or contracts, which deposit may be or become returnable to the tenderers and which they may wish to transfer as a deposit under this contract. Such transfers will not under any circumstances be permitted.

6.22 Tenderers shall note that if the conditions of G.C.C. are in variance with the conditions contained in the tender document the conditions of the tender document shall prevail.

6.23 SITE INSPECTION

Prior to submitting and uploading e-tender for the work the tenderer should visit and examine at the site of works and its surroundings at his own expense and obtain and ascertain for himself, on his own responsibility &risk all information, technical data etc. that may be necessary for preparing his bid and entering into a contract including, inter-alia, the actual conditions regarding the nature and conditions of site, availability of materials, labour, probable sites for Chowky/stores etc. and the extent of lead and lift required for the execution of the work over the entire duration of the contract, after taking into consideration local conditions, traffic restrictions, obstructions in work, if any allow all such extra expenses that are likely to be incurred due to any such conditions, restrictions, obstructions etc. in the quoted contract price for the work.

They shall obtain further clarification, if any, on any specific issue from the office of Executive Engineer Water Works (Const.) City, Hydraulic Engineer's Department, B.M.C. Engineering Hub Building, First Floor Dr. E Moses Road, Worli, Mumbai –400018 before submitting the tender. **Tenderers/Contractors should note and study the condition related to site constraints and its impact.**

6.24 MODIFICATIONS IN TENDER DOCUMENT

If B.M.C. considers it is necessary to carry out any modifications, in the tender documents and extend the closing date of the tender the same shall be made by an addendum. Copy of addendum will be uploaded on e-Tendering website https://mahatenders.gov.in. Each addendum shall be signed by the tenderer(s) and scanned copy of the same should be uploaded in Packet 'B'. The tenderer(s) shall not add or amend the text of any documents contained in tender document.

6.25 TAXES AND DUTIES ON MATERIAL

The tenderer shall quote inclusive of all taxes other than GST (Excluding GST), Levies, Duties, Cess etc as applicable at the time of bid submission. GST as applicable shall be paid separately on submission of bills/invoice.

Input Tax Credit of GST as available with the bidder will not be claimed separately by BMC. However, while quoting the rates benefit of Input Tax Credit or Exemptions shall be passed on to the BMC by way of equivalent reduction in quoted price.

6.26 As per circular CA/Finance/Proj/city/17, dtd:-06.09.2017 "Chapter XXI-Miscellaneous, section 171(1) of GST Act, 2017 governs the **'Anti Profiting Measure' (AMP).** As per the provision of this section, 'Any reduction in rate of tax on any supply of goods or services or the benefit of input tax credit shall be passed on to the recipient by way of commensurate reduction in prices.' Accordingly, the contractor should pass on the complete benefit accruing to him on account of reduced tax rate or additional input tax credit, to BMC. Further, all the provisions of GST Act will be applicable to the tender.

6.27 SOLVENCY CERTIFICATE

Tenderer(s) shall upload a scanned copy of latest solvency certificate for required amount from a bank of B.M.C approved list attached issued ***maximum 12 (Twelve) months prior to due date of tender.*** Latest solvency certificate shall be submitted in physical format if the tender is awarded to bidder.

6.28 ERRORS AND DISCREPANCIES IN TENDER

If tender contains errors in the Bill of Quantities such as computing mistakes, incorrect transfer etc. the Engineer will inform the tenderer(s) of such errors or discrepancies and rectify the errors or discrepancies and will re-total the amounts of Bill of Quantities. The foregoing procedure may be applied at any time prior to award of contract and the Engineer is not liable for any error or discrepancy which was not discovered during scrutiny of the tender.

6.29 EVALUATION OF TENDER

In comparing tenders, the corporation shall consider such factors as the efficiency and reliability of instrument and methods proposed, compliance with the specifications, quality and the tenderer's capacity to perform vis-à-vis the time of completion.

6.30 AWARD OF CONTRACT

Notification of award by way of work order prior to the tender validity period will be issued in writing to successful tenderer. The contract will be awarded to the best responsive tenderer(s) offering the lowest evaluated tender in conformity with the tender document. Corporation reserves

right to accept/reject any or all tenders and to annul the tendering process at any time prior to award of contract.

Prior to the expiry of the Tender validity, the Corporation will notify the successful tenderer(s) by a letter that his tender has been accepted, if required. This letter herein after and in condition of contract called "The Letter of the Acceptance". Notification of Award will constitute the information of contract.

6.31 DISPUTE

In case of any claim, dispute or difference arising in respect of the contract such claim, dispute or difference shall be dealt with as per ***G.C.C clause no. 73, as amended up to date***.

6.32 Contract Labour (Regulation and Abolition Act 1970):

The tenderer(s) should specifically note that the successful tenderer shall have to strictly comply with the entire statutory requirement under the provision of the Contract Labour (Regulation and Abolition) Rules 1970 and with the Maharashtra State Contract Labour (Regulation and Abolition) Rules 1971 and indemnify the Corporation against any claim(s) whatsoever.

6.33 As per the Contract Labour (Regulation & Abolition) Act 1970, every contractor should obtain a license certificate from the office of Labour Commissioner situated at Commerce Center, Tardeo, near A.C market, Mumbai – 400 034.

6.34 An amount of 1% of the contract cost shall be deposited with the government of Maharashtra as per circular u/no BCA/2007/CN/788/Kamgar 7A dated 16.10.2009.

6.35 The tenderer shall submit the copy of Registration issued under Employees provident fund and Miscellaneous Provisions Act 1952.

6.36 The tenderer shall also submit the copy of registration certificate issued under Employees State Insurance Corporation (E.S.I.C Act 1948).

6.37 Tenderers are requested to take cognizance of Child Labour Act and take precaution not to employ Child Labour on site. ***If Child Labour is found to be employed on the work, a penalty of Rs5000/- on the spot will be imposed on the defaulting contractors and further action as deemed fit will be taken***.

6.38 The contract period shall be as mentioned in the tender notice. The period required for mobilization, procurement of material, traffic permission, other required permissions, erection of site office etc. complete shall be reckoned from the date of issue of work order.

6.39 The project works, laying of water main work shall not be carried out during the monsoon period without prior sanction from competent authority.

6.40 The rates for unforeseen fair and extra items for the works, which are available in the Unified Schedule of Rates of B.M.C, applicable to the tender, will be paid as per G.C.C. in force as Amended up to date by B.M.C.

6.41 The tender shall have to start & simultaneously carry out the works included in the tender at multiple locations or as directed by the engineer.

6.42 As per circular no. CA/FDT/1488/of 17.01.2012 no amendments in the original scope of work will be made without specific prior approval of concerned A.M.C /M.C. No permission will be granted in any circumstances, to execute any additional work in another ward, by using the savings in BOQ, without sanction of competent authority. Tenderer should strictly note this clause.

6.43 The proposed subject tender work ,the water mains shall be laid by diverting, re-aligning, and Supporting etc any/all existing utilities as directed and in consultation with respective authorities such as B.E.S.T, Traffic Police, M.T.N.L, B.S.E.S,M.S.E.B, Tata Electric Co, Tata Power, Mahanagar Gas, Railway Authority, Forest Authority, Salt Dept., P.W.D, MBPT, Tata Power, M.M.R.D.A, M.S.R.D.C etc. All precautionary/preventive and safety measures shall be taken to avoid any mishaps/accidents with utilities, labours and public. Any damage to utilities and consequences thereof shall be made good by the tenderer at his own risk and cost as directed by the authority/B.M.C.

6.44 The subject tender water work is proposed on most busy road in Mumbai. There will be remote chances to get full closure of road. Intending tenderers have to carry out the work in phase wise manner by allowing moving heavy vehicular traffic nearby and abutting to existing concrete road/asphalt road, Bridge foundation & substructure, infrastructure of existing utility and infrastructure if any and safeguarding of the same shall be entirely tenderer's responsibility. All precautionary/preventive and safety measures shall be taken to avoid any caving underneath the pavement, side collapse & mishaps/accidents thereof. No extra claim will be entertained on this account. Any damage & consequences thereof shall be made good by the tenderer at his own risk and cost as directed by the authority/B.M.C.

6.45 The tenderer should note that he has to provide adequate barricading, during the various activities concern with the completion of the work in all respect in view of the above mention site conditions while carrying out the work as per the design and drawing of the BMC.

6.46 BARRICADING

Bidder shall note that, "Barricading shall be provided free of cost as per circular vide u/no. MGC/F/6342 dated 05.05.2018 & as per Annexure I,II& II of standard drawings &specifications with slogans & department wise color codes to the excavated trenches as per site condition." No payment shall be made for barricading. The copy of circular in this regards is as below:

Note: As the latest circular u/no.साप्रवि/ ८८/ मप, दिनांक; २८.०४.२०२२***tenderer shall be notedthat the "Municipal Corporation of greater Mumbai" should be replaced with "Brihanmumbai Municipal Corporation" on the barricades.***

MUNICIPAL CORPORATION OF GREATER MUMBAI

CIRCULAR

U/No.MGC/F/6342 dated 5.5.2018

Sub.: Revised guidelines regarding barricades being used during the execution of various infrastructure development projects by MCGM in Mumbai.

Various infrastructure development projects are being executed by MCGM for the betterment of citizens of Mumbai. During the course of execution of the projects, it is necessary to provide strong and secured barricading as a safety measure to avoid any mishaps as well as to avoid nuisance to vehicular and pedestrian traffic. Nowadays, the following types of barricades are being used exclusively in MCGM as per the convenience of various departments at different sites.

1. Water/sand fillable PVC Metro barricades.
2. RW 7.45 (G.I. sheets of 22 gauge fixed on 3 inch dia. Wooden bullies buried in existing road sufficiently)
3. RW 7.36 (G.I. sheets of 22 gauge fixed on MS Angle post buried in half the depth in drums of 20 litres capacity in 1:3:6 concrete)
4. Structural steel barricade for major trenches having depth more than 2.00 meters.

Thus from the above, it can be seen that there is no uniformity in provision of barricades as they are of different size and shape. Further it is also observed that the continuity is not maintained in providing the barricading keeping gaps in between thus endangering the safety of vehicular as well as pedestrian traffic. Also the barricades are not being cleaned, thus further adding to shabbiness. Further Mumbai being the financial capital of India, people from all over the world visit the city daily and to maintain good image of city the following decisions are taken.

A) Only two type of barricades having department wise colour coding are proposed to be used depending upon the nature of work i.e. Minor and Major.

i) **Minor works**: Barricading made out of 1.5 mm thick MS plate fixed on M.S. angle post/ frame of 65 mm X 65 mm X 6 mm having height of 1.5 m supported on as shown in Annex-I.

ii) **Major works**: Structural steel barricade made out of 1.50 mm thick M.S. Plate ISMB 250, ISLC 250X50mm and ISA 50mmX50mmX6 mm having of size 2.5 m X 2 m as shown in Annex-II.

B) The department wise colour coding for the barricading shall be as under:-

i) H.E. & W.S.P. department – **Blue**

ii) Roads, Traffic, Bridges and Coastal Roads department– **Yellow**

iii) S.P. & S.O department – **Green**

iv) S.W.D., Building Maintenance department & for ward works – **Red**

C) The basic principle behind installing secured and continuous barricading is to ensure the safety of vehicular as well as pedestrian traffic and residents in the nearby vicinity of the project. Due to non-installation of appropriate barricades on sites if any mishap occurs leading to injury or loss of life, then the contractor and contractor's Engineer in-charge will be liable for the consequent action.

D) During the course of execution of project, if it is noticed that the contractor has not provided barricading then a penalty of Rs.1000/- per meter per day will be imposed upon the contractor and will be deducted from the due Bill. This penalty shall be a part of penalty as per tender condition.

E) Details of the work shall be prominently displayed on the central panel of the barricades along-with the Social Slogans as given in Annexure III and the Cycle of the same shall be maintained.

F) The contractor shall provide and install the barricading alongwith the slogans printed as per the Annexure III, at his own cost and no payment will be made for this, however the contractor shall quote the bid accordingly by considering the cost of barricading.

The condition shall be included in the tender as given below. " Barricading shall be provided free of cost as per Circular vide U/No.MGC/F/6342 dated 5.5.2018 and as per Annexure I, II and III of Standard drawings and specifications with slogans and department wise colour codes." The copy of circular will be attached to the tender as a part of tender document.

This circular will be applicable for the new tenders proposed to be invited from 01.06.2018 and also the corrigendum shall be attached to tenders which are uploaded. However, for the projects wherein the tenders are already invited, the barricading shall be provided strictly as per tender condition. All the details (Annexure I, II & III of Standard drawings and specifications with slogans and department wise colour codes, sketches and department wise colour coding) are uploaded on MCGM portal.

This circular shall come in force with immediate effect.

sd/- 20.4.2018
(Shri V.P . Chithore)
Dir.(ES&P)

sd/- 20.4.2018
(Shri R. B. Bambale)
D.M.C.(S.E.)

sd/- 21.4.2018
(Shri Vijay Singhal)
A.M.C.(E.S.)

sd/- 21.4.2018
(Dr. Shri Sanjay Mukherjee)
A.M.C.(P.)

sd/- 5.5.2018
(Shri Ajoy Mehta)
M. C.

sd/- 16.5.2018
(Shri V.P . Chithore)
Dir.(ES&P)

sd/- 16.5.2018
(Shri P. R. Kadam)
D.M.C.(S.E.)

A) Only two types of barricades having department wise colour coding are proposed to be used depending upon the nature of work i.e. Minor and Major as directed by Engineer In Charge.

i. Minor works: Barricading made out of 1.5 mm thick MS plate fixed on M.S. angle post/ frame of 65 mm X 65 mm X 6 mm having height of 1.5 m supported on as shown in **Annex-I**.

ANNEXURE I

A) Minor work

Providing, fabricating and installing the barricading made out of 1.5 m high M.S. Angle post of 65 mm X 65 mm X 6 mm with 1.5 mm thick M.S. Sheet of size 1.55 m X 1.2 m welded to the M.S. angle post/ frames and fixed to 75mm X 75mm X 6 mm angle base as shown in sketch for minor works , displaying of the social slogan as per the Annex - III, daily cleaning of the same to get better appearance and interlocking arrangement to ensure continuity in provision and to avoid gap in between etc complete and as directed by Engineer in-charge.

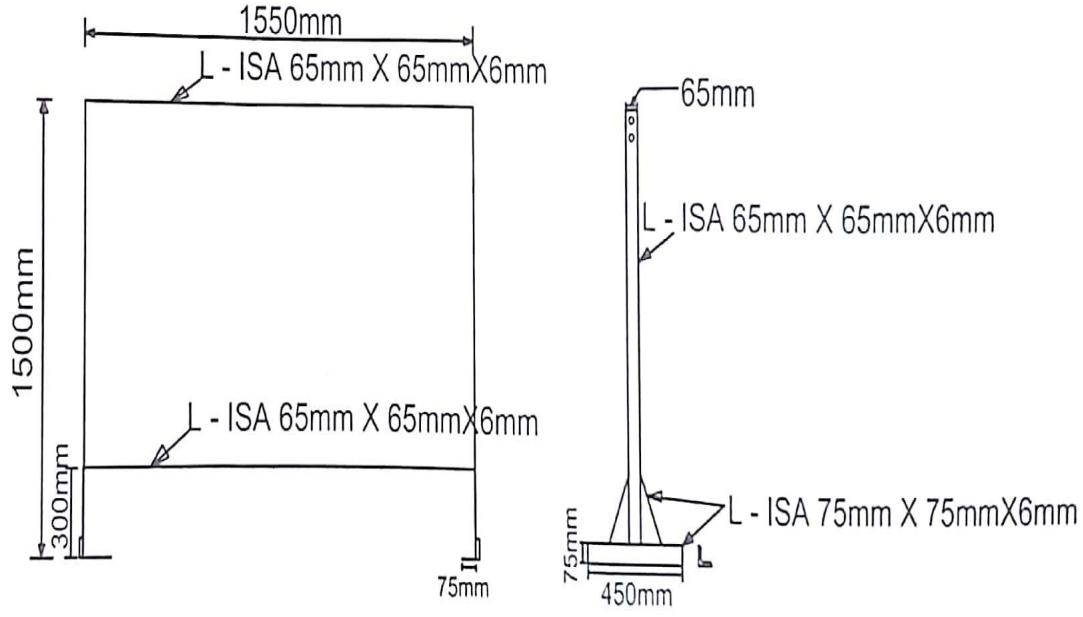

ii. Major works: Structural steel barricade made out of 1.50 mm thick M.S. Plate ISMB 250, ISLC 250X50mm and ISA 50mmX50mmX6 mm having of size 2.5 m X 2 m as shown in **Annex-II**.

ANNEXURE II

B) Major works:

Providing, fabricating and installing the structural steel barricading made out of 1.5 mm thick M.S.plate of size 2500 mm X 2000 mm, ISMC 250 X 50 channels, M.S. Angles ISA 50 X 50 X 6mm and ISMB 250 as per IS 1161-1 RHS/SHS rolled angle plates of TATA Steel, Lloyd Steel, SAIL, ESSAR steel approved in straight profile of all sizes, shapes and for all works including stiffeners, bolts and nuts, filet / butt welding, splicing, machine grinding, of all member joints wherever required to give neat appearance, and dailycleaning the barricading along with displaying of the Depthwise slogans as given in Annexure -III etc with interlocking arrangement to avoid gap in between and as directed by Engineer in-change.

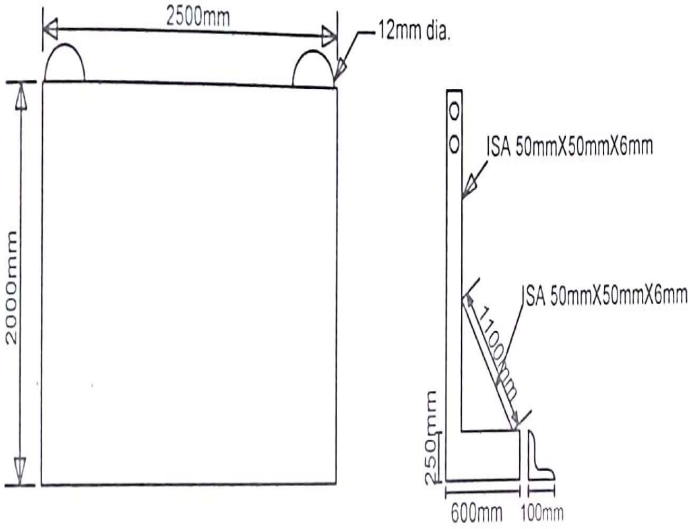

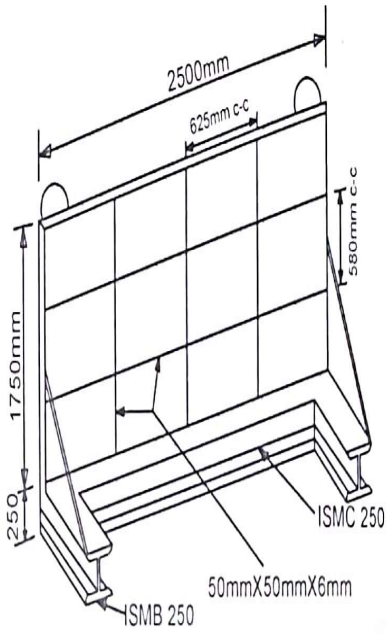

B) The department wise colour coding for the barricading shall be as under:-

a. H.E. & W.S.P. department – Blue
b. Roads, Traffic, Bridges and Coastal Roads department– Yellow
c. S.P. & S.O department – Green
d. S.W.D., Building Maintenance department &forward works –Red

C) The basic principle behind installing secured and continuous barricading is to ensure the safety of vehicular as well as pedestrian traffic and residents in the nearby vicinity of the project. Due to non-installation of appropriate barricades on sites if any mishap occurs leading to injury or loss of life, then the contractor and contractor's Engineer in-charge will be liable for the consequent action.

D) During the course of execution of project, if it is noticed that the contractor has not provided barricading then a penalty of Rs.1000/- per meter per day will be imposed upon the contractor and will be deducted from the due Bill. This penalty shall be a part of penalty as per tender condition.

E) Details of the work shall be prominently displayed on the central panel of the barricades along-with the Social Slogans as given in Annexure III and the Cycle of the same shall be maintained.

F) The contractor shall provide and install the barricading along with the slogans printed as per the **Annexure III**, at his own cost and no payment will be made for this, however the contractor shall quote the bid accordingly by considering the cost of barricading.

ANNEXURE III

1) HYDRAULIC ENGINEER's DEPARTMENT/ WATER SUPPLY PROJECTS
   i) Inconvenience regretted
   ii) Ensuring Mumbai's water supply
   iii) Save water Save life

2) ROAD, TRAFFIC / BRIDGES DEPARTMENT
   i) Inconvenience regretted
   ii) Working towards a better tomorrow
   iii) My Mumbai, Green Mumbai

3) SEWERAGE PROJECTS DEPARTMENT/ SEWERAGE OPERATIONS DEPARTMENT
   i) Inconvenience regretted
   ii) Reduce Reuse Recycle
   iii) Clean Mumbai , healthy Mumbai

4) STORM WATER DRAIN DEPARTMENT/ WARD WORKS
   i) Inconvenience regretted
   ii) Working towards a better tomorrow
   iii) Swatch Bharat

Specifications with Slogans & Department wise colour codes are as below:-



Specifications with Slogan & Colour Code for Major Work (No.01)

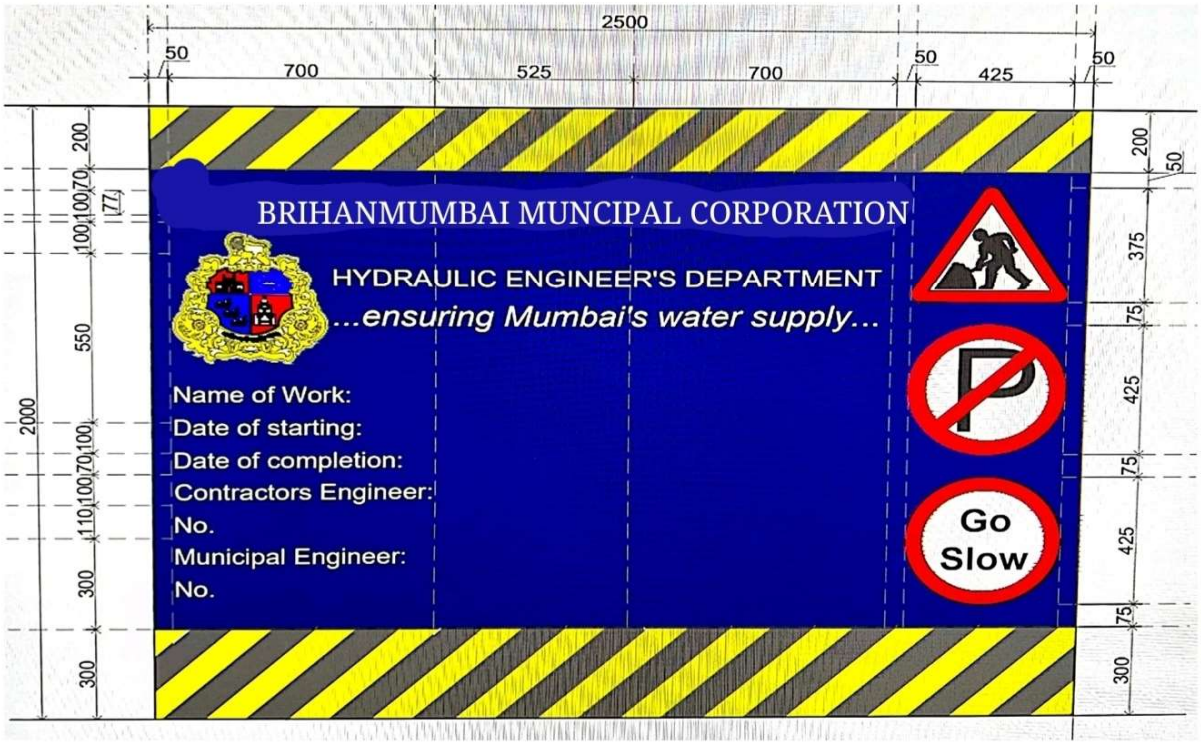

Specifications with Slogan & Colour Code for Major Work (No.02)

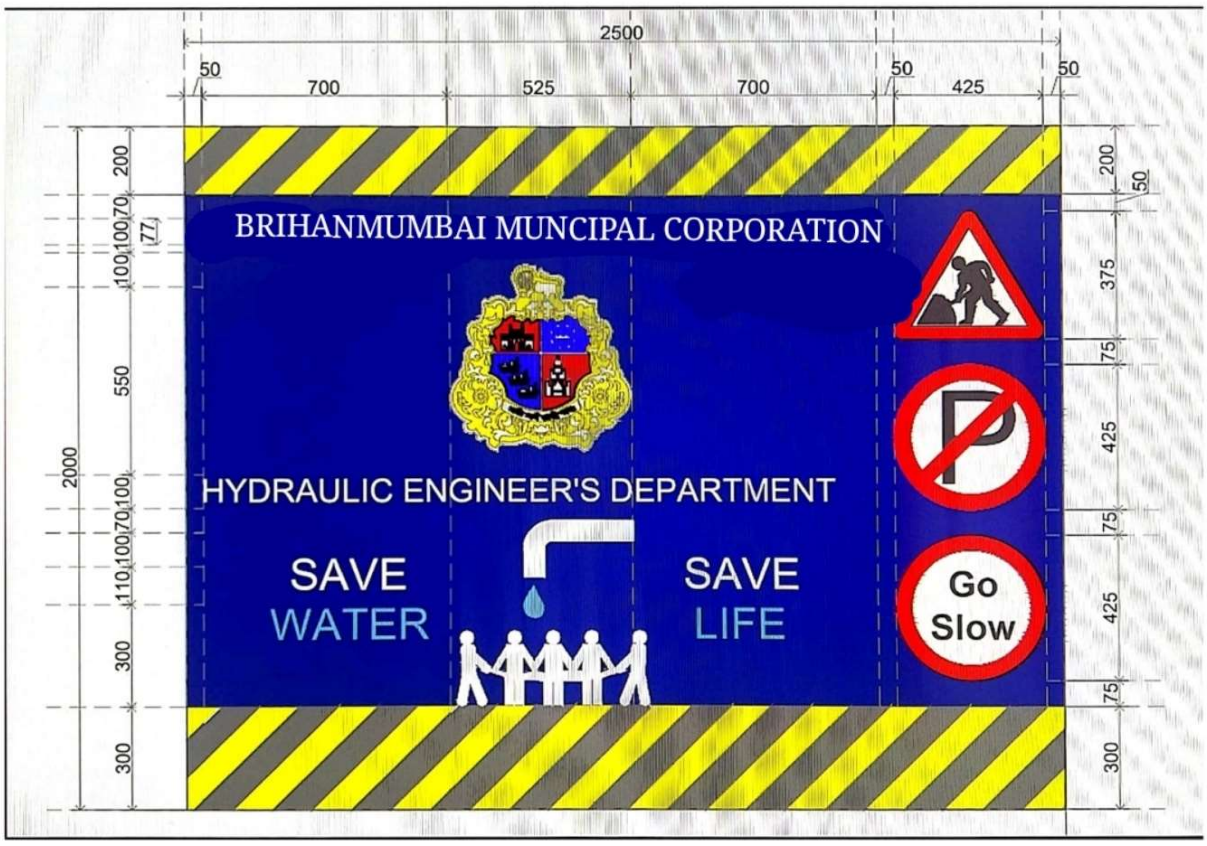

Specifications with Slogan & Colour Code for Major Work (No.03)



Specifications with Slogan & Colour Code for Major Work (No.04)

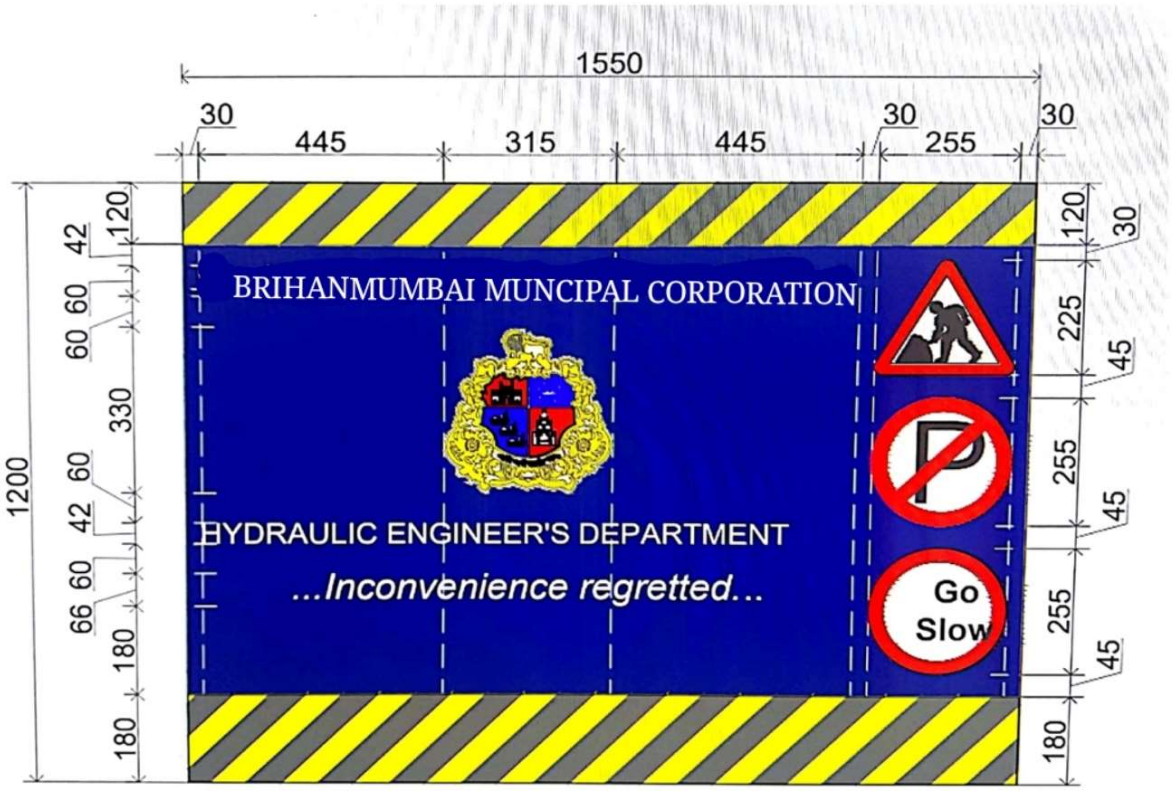

Specifications with Slogan & Colour Code for Minor Work (No.01)

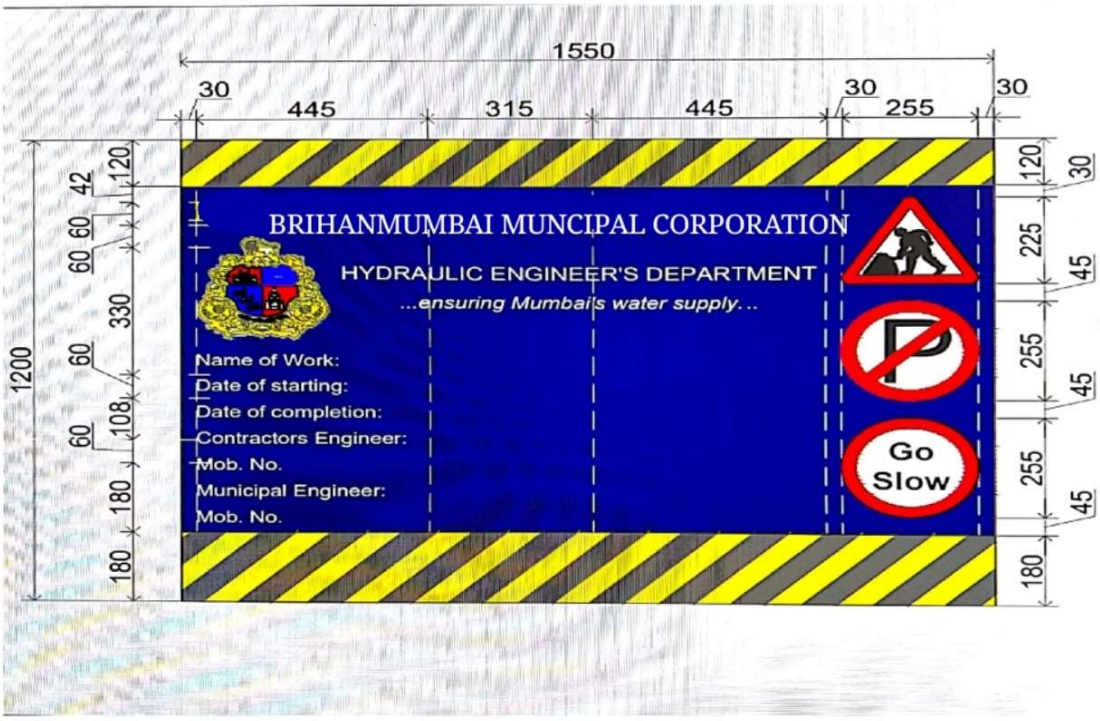

Specifications with Slogan & Colour Code for Minor Work (No.02)



Specifications with Slogan & Colour Code for Minor Work (No.03)

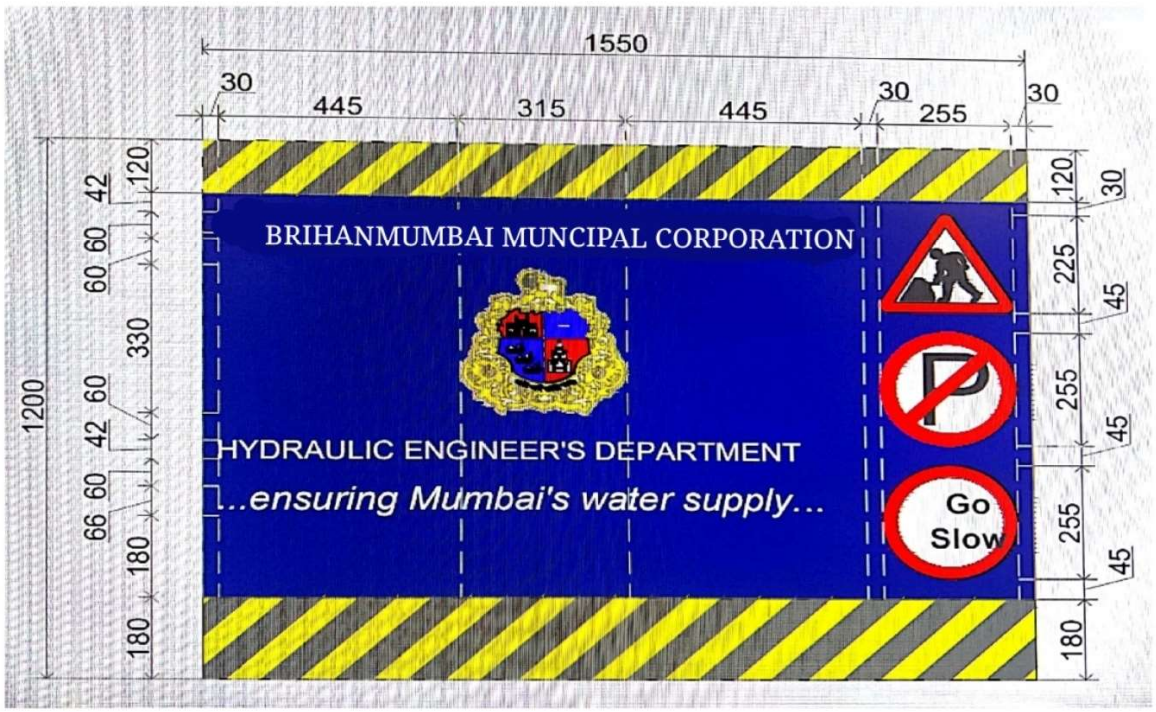

Specifications with Slogan & Colour Code for Minor Work (No.04)

6.47 Quantities of all items provided in the BOQ may not be required to be executed depending upon the site conditions. The tenderer shall not be entitled for any compensation on this account. Before starting the work, tenderer shall consult with the site in charge and shall take actual measurements on the site for procurement of material.

6.48 The tenderer should note that while executing the jobs allotted to them, the payment will be made as per the items included in the BOQ& as per the relevant items included in the various unified schedules of Rates of the B.M.C effective at the time of work and if any item or activity doesn't cover in the BOQ, the payment will be made as per the G.C.C or as amended from time to time by B.M.C.

6.49 The Tenderer shall procure necessary material required for the work with ISI mark wherever applicable from the manufacturer(s), with ISI certificates and or according to B.M.C specifications.

6.50 All material required for the work can be stacked near the site of work in such a manner so as not to cause any inconvenience to the pedestrian and vehicular traffic. If no space is available on site then tenderer shall make his own arrangement for stacking of material etc. No extra payment will be made on this account.

The tenderers shall have to make their own provisions for site office / labourers huts / site godown either on his / her own place or rented / leased place. No permission shall be granted vide circular u/no ChE/487/Rds(Tr&Br)/SR dated 18.09.2012 for erecting site office / labourers huts / site godowns on road carriageway / footpath.

6.51 The tenderer shall obtain traffic permission from Traffic Police Department. For erection of site office, cement godown, store etc. wherever required. The tenderer shall obtain necessary permission from concerned competent authority on payment of necessary charges as demanded by the concerned authorities as per the prevailing rules. The cement godown, watchman's cabin etc. shall be provided as directed and shall be removed by the Tenderer on completion of the work at their cost wherever required. It is also binding on Tenderer to fulfill requirements of environmental authorities. The work shall be started only after construction of site office, cement godown, store etc. (after completing all formalities) and after getting necessary traffic. Permission, road opening permission if applicable etc.

6.52 The tenderers should simultaneously work at one / multiple places as directed by Engineer to complete the work within contract period. BAR / C.P.M / P.E.R.T / Milestone chart shall be submitted considering all these factors.

6.53 Tenderers shall obtain permission from traffic police department and shall provide various boards and proper barricading of trenches wherever necessary on site to have smooth traffic as per the requirement of traffic police department and shall have proper coordination with competent concerned authority/ward staff, A.E.W.W and A.E.W.W (Maint.) etc. If required & insisted by traffic police department traffic warden shall be appointed on site.

6.54 Tenderer shall have to obtain all the permissions of the concerned authorities required for carrying out the work. Only recommendatory letters will be issued by the B.M.C.

6.55 Within one month of completion of work, the tenderer shall submit at his cost seven copies of Ammonia prints of completion drawings of laying work if any along with soft copy showing all the details checked and duly signed by Engineer & tenderer. The payment of final bill shall be made to the appointed Contractors after receipt of above sets failing which necessary action as per G.C.C / circulars in force on the date of work order till the entire contract period will be initiated.

6.56 Item of cutting C.I. pipe is also applicable for Ductile Iron Pipe and no fair rate will be admissible.

6.57 The contractors should provide suitably required number of M.S plates on trenches of suitable thickness and size for smooth movement of vehicular traffic as per the requirement of traffic department. Contractor should note that no payment will be made to the contractor for providing, removing and refixing M.S plates on trench etc.

6.58 While excavation of trenches, temporary arrangement like placing of M.S plate over/ trenches in front of the entrances of the properties shall be done to allow vehicles/ public entries to the properties. No extra payment will be made for this.

6.59 All mild steel specials required for execution of work shall be fabricated from pipes on site. No extra cost will be paid for fabrication of M.S. specials except payment for welding and cutting under respective item of bill of quantities. Also payment for laying of M.S specials in trenches will be made with average length for bends (mean of internal outer length). In case of valve

chambers, the required M.S cover plates& M.S sections will be considered for payment on weight basis & it is inclusive of cutting, welding, fabrication, etc, required to complete the work.

6.60 Contractors should note that the work of laying of water main and work of cross connections shall be done simultaneously within the time period. As soon as laying work is started main cross connection shall be carried out and water main shall be flushed as directed.

6.61 **Tenderer should note that the supply of material, supply of C.I. specials, M.S specials if included in the Bill of Quantities shall be made available anywhere in the city or suburbs or at the departmental work chowky as directed. The rates of these supply items include transport, loading, unloading etc. complete. (Note: the suitable rebate will be considered as applicable.)**

6.62 Tenderer shall note that H.E's schedule item for Butterfly valve is inclusive of providing and fixing adopter. No extra payment will be made on this account.

6.63 The contractor will be directed by the Engineer to execute the additional emergency work of excavation, laying of water mains, cross connections, construction of S.V. Chambers, concrete blocks, digging trial pits & other related works to H.E. Dept. etc. to any extent. The quantum of the work of any item may get reduced or increased to any extent. However, the payment of the work shall be made as per terms and conditions of contract.

6.64 Wherever mechanical joints will be used on the water main it will be necessary to fill the gap between the outer edge of the pipe and special / collar/socket with spun yarn as usual. The costs of fixing mechanical joints are inclusive of said work. No extra amount will be paid on this account.

6.65 The sluice valves, B.F. valves, air valves, fire hydrants etc. to be provided on proposed water main shall be as per relevant I.S/M.C.G.M specifications and shall be got tested in Municipal Workshop or as directed by the Engineer.

6.66 In case the controlled concrete to be provided at one place/or on particular day, is of small quantity i.e. less than 10 Cu.m, M10 may be considered as equivalent to 1:3:6, M15 as 1:2:4, M20 as 1:1.5:3.The concrete sample/ cubes for M10, M15, M20 shall be tested for every100 Cu.m quantity irrespective of individual quantity is less than 10Cu.m.

6.67 The contractors shall bring the correct size of metal/material required for construction of water bound layers. The contractors will not be allowed to break stones for preparation of material for water bound layers on site.

6.68 The rate of supplying, loading, transporting on site, unloading and lowering in trenches of all kinds of pipes up to 450 mm dia. is inclusive of cleaning, flushing and testing of water mains up to 10 kg /cm2pressure as directed by the engineer.

6.69 Latest circulars / guidelines should be followed for providing fencing, barricading & lighting.

6.70 Please refer circular No. HE/Cir/13 dated 25.10.05 for specification of M.S, D.I& P.E pipes or amended till date.

6.71 All the sluice valves to be provided shall be GLANDLESS VALVE &preferably with clock wise opening. False Key (i.e. Chavi) required to operate Butterfly valve should be provided with vertical pipe rod and handle as directed by the Engineer. No additional payment for the same will be paid to the tenderer.

6.72 Materials required for fabrication of M.S. pipes, bends and specials etc. mild steel plates of required size and thickness shall be procured at contractor's cost conforming to IS 2062:2006 (or latest revision)-FE-410. The M.S. pipes shall be fabricated as per IS 3589 (i.e. the fabricated company shall have ISI certificate for fabrication of respective dia. of MS pipes). Spirally welded pipes will not be allowed. Every 10th welding joint of mild steel pipe water main shall be tested in metallurgical laboratory for its strength

6.73 **The M.S. Pipes of dia. 1200 mm & above shall be manufactured from plates confirming to IS 2062:2006 (or latest revision)- FE-410 Cu-WA (Copper bearing quality) with copper content as per product analysis between 0.17 to 0.38 percent** & the M.S. Pipes of dia. below 1200 mm shall be manufactured from plates confirming to IS 2062:2006 (or latest revision)- FE - 410

6.74 The tenderer shall note that the payment towards procurement of M.S. plates for fabricating M.S. pipes / specials will be made as per tender item only. **No extra charges / payment** for using M.S. pipes fabricated from Fe 410 Cu-WA (copper bearing quality) with copper content between 0.17% to 0.38 % as per specifications will be entertained / considered on any account

6.75 The M.S. Pipes shall be manufactured from plates confirming to IS 2062:2006 (or latest revision)- FE -410.The M.S. pipes shall be fabricated as per IS 3589(i.e. the fabricated company shall have ISI certificate for fabrication of respective dia. of MS pipes). Spirally welded pipes will

not be allowed. Every 10th welding joint of mild steel pipe water main shall be tested in metallurgical laboratory for its strength.

6.76 All the pipe material should be procured from reputed manufacturers such as JINDAL SAIL, ESSAR, ISPAT etc . The contractor shall submit the original test certificate from the manufacturer for the grade of the material and yield strength.

6.77 All the excavated material belongs to the B.M.C. and therefore shall be the property of BMC. It will be mandatory on the part of tenderer to use this material in the execution of works under contract, if the quality of material available is as per the specification. The tenderer should note that if Municipal Dumping Ground is available then contractor has to dump the surplus excavated material to Municipal Dumping Ground at his own cost as directed by the engineer. In case of non- availability of Municipal dumping ground, the intending tenderer should note that the tenderer has to make his own provision/arrangements of plot in BMC limit or outside BMC limit at his own cost for dumping/disposal of surplus excavated material by obtaining the permission from owner of dumping site and NOC of concerned authority for debris management plant etc. **No payment will be made for removal of earth of any work.**

As and when royalties becomes payable to Government Authority on excavated material as per statutory requirements, the payment shall be made by the tenderer. The tenderer shall pay necessary royalties and submit documentary evidences of such payments to the Engineer for his information and records. The intending tenderer should note that, no transportation and other charges will be paid to the contractors and he has to quote their offering considering all factors.

Contractor has to dispose of C & D waste generated as per the directions given in the circular under no.DMC / SWM / 1658 dtd. 11.8.2026 attached at pg. no. to .

6.78 ~~B.M.C staff may visit the factory before and/or during fabrication of M.S pipes as directed. The contractor shall make arrangement for the factory visit at his own cost~~.

6.79 The payment for internal cement mortar lining work to water main shall be paid on the basis of diameter specified in the bill of quantities and not for actual diameter of pipe within the tolerance limit. No extra claim for payment towards variation in actual pipe diameter within tolerance limit will be considered/ entertained.

6.80 The completion reports for various activities along with its drawing shall be submitted to the B.M.C. immediately after execution of the work.

6.81 All the materials required to use for execution of the work to be got tested as directed by the Engineer before use.

6.82 Noise level shall be maintained as per circular under no.CE/ PD/ 7788/ I dated 05.11.08.

6.83 The tender is proposed exclusively for Dy.H.E (Const) division of Hydraulic Engineer's department.

6.84 The contractor has to provide vernier caliper, micro meter and digital instrument for measuring thickness of pipe/ferrule etc.

6.85 The tenderer shall note that the tie bars if required to be provided by drilling holes to the existing cement concrete as directed the said work shall be done as directed by the engineer without any extra/additional cost to BMC.

6.86 The tenderer shall remove the water, filled for hydraulic testing of the newly laid water main/ water main stretch if required after satisfactory testing at his own cost without claiming any extra /additional cost towards dewatering to BMC.No payment will be made for any kind of dewatering

6.87 There is a paucity of space for stacking of pipes. The pipes may have to be delivered and unloaded near the site at locations far away from place of laying the pipes. However, no payment will be made for double handling or transport beyond 500 meters from place of laying. No payment for re-transportation, loading, unloading etc. of pipes or specials received at site for activity beyond 500 meters will be made under any circumstances. The successful bidder will have to manage transportation of pipes and specials etc. to site bearing this constraint in mind.

6.88 After completion of work, contractor has to submit detail location of work with three reference point and also of water main laid.

6.89 **The contract period is exclusive of monsoon.** Normally excavations are not permitted in the month of May and Tenderer shall complete refilling and reinstatement of all trenches, and the site shall be cleared in all respect including removal of surplus material on or before 15th May of every year or as directed by Engineer. During the monsoon period, i.e. from closure of excavation if any urgent work is directed, then actual working period of that working period of that work will be considered as working days.

6.90 Tenderer at his cost, (i.e. including cost of testing, transportation, loading, unloading of material etc complete) shall test pipes, specials, valves, cement and all other material, as directed by the Engineer. No extra payment will be made on this Account.

6.91 Surplus Excavated earth / concrete material / Asphalt cakes / debris on site shall be removed speedily from the site by the contractor as directed by Engineer in charge.

6.92 The tenderer shall arrange for and test water main at required pressure as directed as per BOQ, failing which, same will be carried out by the B.M.C at the risk and cost of the tenderer. After testing of water main, same shall be handed over to competent authority of B.M.C. / A.E.W.W of respective wards / A.E.W.W (Maint) by the tenderer as directed. Tenderer shall also note circular u/no. DMC/SE/1642 dtd. 06.07.2017 regarding flushing, testing, chlorination & commissioning of water main.

6.93 The rate of supply, loading transporting on site, unloading & lowering in trenches of all kinds of pipes up to 450mm dia. is inclusive of cleaning, flushing & testing of W.M up to required pressure as directed by the Engineer.

6.94 If a part of completed line is required for commissioning, the same shall be handed over to the Corporation after specified testing of water main by tenderer . No extra payment, for carrying the material by head load to work site, shall be considered under any circumstances.

6.95 The tenderer(s) shall note that only 95% payment of payable amount will be released for the completed work and balance 5% shall be released after completing the following works:

a) Testing of pipeline along with fittings satisfactorily.
b) Reinstatement of trenches.
c) Returning of reclaimed materials to the Municipal Store / Ward as specified.
d) Cleaning the site.

6.96 No core cut sample will be allowed in case of asphalt mix.

6.97 Tenderer, at their cost shall submit seven sets of "As laid" drawings of water main showing actual alignment with three point location along with the soft copy within 30 days upon submission of final bill.

~~**6.98** The work may be subjected to third party audit for quality assurance. The representative of the quality assurance agency appointed for third party audit will supervise the work on day to day basis or as directed by Engineer. Tenderer should make necessary sitting arrangement for representative of this agency. The quality assurance agency will issue instructions through the site in charge of B.M.C. during execution of the work. All the observations, instructions made by~~

~~the quality assurance agency & confirmed by B.M.C. staff will be binding on the contractor & they should be complied accordingly by the contractor.~~

6.99 Program of work: If at any stage the previously approved program is required to be modified, the tenderer shall do so immediately as directed by the Engineer. If it is necessary to close some phase of the work and start a new phase as directed, the tenderer shall do so without claiming any extra payment. The program shall be reviewed periodically and rescheduled as directed.

6.100 Measurement of excavation shall be as per the items in the Bill of Quantities. If the actual excavations are more than the specified, excess excavation shall not be payable. However, if the actual excavations are less than the specified but accepted by the Engineer, the same shall be paid at actual.

6.101 The cross connection works etc. are required to be planned in view of the water supply hours in a particular area. Extra payment shall not be considered for works carried out during early, late or night hours. The work of cross connection at the tapping point shall be undertaken immediately after starting the work. Subsequently the work of cross connection at down streamside shall be completed. In any case the cross connection works shall be completed within one month of start of laying of pipes. If tenderer fail to carry out the work within the non-supply hours, the same will be carried out by the B.M.C at the risk and cost of the tenderer and recoveries shall be effected from the dues payable to the tenderer.

6.102 The contractors will have to work during night time also and no extra claims will be entertained. The bidder shall note while working during night hours the machineries used shall comply with the noise levels as mentioned in circular No CE/PD/7788/I/dated 05.11.2008.

~~**6.103** There is a paucity of space for stacking of pipes. The pipes may have to be delivered and unloaded near the site at locations far away from place of laying the pipes. However no payment will be made for double handling or transport beyond 500 meters from place of laying.~~

~~**6.104** No payment for re-transportation, loading, unloading etc. of pipes or specials received at site for activity beyond 500 meters will be made under any circumstances. The successful bidder will have to manage transportation of pipes and specials etc. to site bearing this constraint in mind.~~

6.105 As regards payment for providing & fabricating M.S pipes, no payment will be made to contractor against the supply of M.S pipes. The payment for supply of M.S Pipes shall be made only after completing laying& welding work of M.S pipes. **However, supply of M.S fabricated pipes shall be in proportionate to the planned work of pipe laying as shown in the Bar Chart / C.P.M /P.E.R.T. Supply of M.S pipe beyond the quantity mentioned in the Bar Chart / C.P.M /P.E.R.T will not be entertained for payment towards the supply. However, if the work is**

ahead of the schedule the payment will be made accordingly. The Bidder / Contractor should note this specifically. The tenderer should note this specifically while submitting the bids & plan the work accordingly.

6.106 No extra payment will be made for cofferdam, dewatering of any source of water including dewatering of body water from water mains, barricading, removal of silt, removing of earth etc.

6.107 Details of recovery of existing sluice valve replaced by the contractors in the tender work are:

a) For 150mm dia. S.V., recovery will be made at the rate of Rs. 2481.56 per number.

b) For 250mm dia. S.V., recovery will be made at the rate of Rs. 6221.38 per number.

c) For 300mm dia. S.V., recovery will be made at the rate of Rs. 8388.38 per number.

~~**6.108** Item of SOR 2013, CS MW 1 b Brick work with common burnt clay F.P.S. (non modular) bricks of class designation 7.5 in foundation and plinth in: Cement mortar 1:4 (1 cement : 4 coarse sand) is included in this tender. However, many of the times common burnt clay F.P.S. (non modular) bricks of class designation 7.5 as specified in schedule of rate are not available in market and due to the emergency of the work of construction of sluice valve chamber, the same work is carried out using regular brick (for example--K.B.K. Bricks) in such cases rebate of rupees 1100/- per Cu.m will be taken towards use of regular brick.~~

6.109 **Site Office & its allied conditions:**

On the receipt of the work order, the contractors will have to erect ready-made AC site chowky at least one number or more as directed by the Engineer in form of Porta cabin/ Container cabin or semi permanent or permanent structure with appropriate insulation from heat, and one or more Godown, before commencement of the work, without any extra cost. The contractors will obtain necessary permission from concerned Asstt. Commissioner of ward/s or competent B.M.C authority for suitable location for the site office/chowky, godown, place for stacking machineries& material etc. The contractors will provide following facilities, equipments, chowky, etc

i. Successful tenderer, therefore, will have to furnish information as regards the name and complete address of his bank, its branch and the bank A/C No, and Vendor Regn. form etc. along with tender document. They will have also to submit fresh information when there is any change in this regard.

ii. The Porta cabin of area preferably about 30 sq.m. with air conditioner with at least two windows for proper ventilation.

iii. It should have toilet facility with necessary plumbing arrangements. After completion of the work, the chowky and toilet should be completely removed within 7 days.

iv. The Chowky should be equipped with electric supply, fans, sufficiently big tables, chairs, cupboard with locking arrangement and water filter (of approved brands) etc.

v. The successful tenderer will have to make his own arrangement at his cost for the electric power supply required for the work either by taking connection from M.T.N.L / RELIANCE/M.S.E.B/B.E.S.T/TATA or arrange his own generators.

vi. Tenderer, at their cost shall provide and maintain a telephone at the Engineer's site office.

vii. The contractors are directed to make suitable arrangement in site office to prepare and maintain site record/registers so as to enable to upload the same in SAP.

viii. Contractor shall provide 10 megapixel digital camera for taking photographs of work during execution& also later, if required.

ix. Site godown& separate cabin/Site Laboratory adjacent to site office for contractor's staff / any other consultant / Quality control auditors if appointed by B.M.C as per requirement.

x. The contractors will be given 12 mm dia. or 20 mm dia. (or as decided by the H.E) metered water connection for drinking purpose only if necessary. Extra water required for construction purposes will have to be brought by the contractors at his cost and no extra claims on this behalf will be entertained. The contractors have to obtain necessary permission for such connections from respective A.E.W.W of wards /Competent Authority and shall pay the necessary connection charges.

Note: A)

i) ***If chowky / Site office with necessary requirements is not provided within 30 days from the date of issue of work order, a penalty of Rs 10000/- per day will be imposed.***

ii) If there is further delay more than 30 days, a penalty of Rs 20000/- per day (i.e. starting from 31st day from the date of issue of work order) will be forfeited from paid A.S.D,OR will be recovered from 1st R.A. Bill.

iii) If there is further delay more than 45 days, a penalty of Rs 50000/- per day (i.e. starting from 46 the day from the date of issue of work order) will be forfeited from paid A.S.D,OR will be recovered from 1st R.A. Bill.

B) If any of the items except at A of the notes mentioned above is not provided, Additional penalty of Rs. 1000/- per day/item, will be imposed.

The bidders have to consider the costs of all items mentioned above and quote their % accordingly.

~~**6.110 Vehicles/Transportation arrangement for Engineers and Employers Staff:** The subject work may need to be carried out at various junctions/locations at the same time. Due to this the contractor has to make transportation arrangement for engineers & his staff round the clock 24 x7 till completion of work for smooth working & supervision of the subject work. The transportation arrangement shall be provided from the date of starting of the work. No payment will be made for the same.~~

6.111 SITE LABORATORY: ~~**:(Required/ Not required)**~~

(Space for site laboratory will not be provided by B.M.C.)

Contractors shall set or provide a laboratory at or around the site of size about 30 sq.m before commencement of work at their cost for performing various tests and at least the following machines and equipments shall be provided therein:

1) Roadometers, Torches, measuring tapes of lengths @ 3 R.m, 15 R.m, 30 R.m, & 50 R.m of approved make.
2) Kadappah stone platform of size 2.5 R.m x 0.9 R.m approx.
3) First Aid box.
4) Compressive testing machine (for concrete cube tests), of minimum 150 tonne capacity electrically operated and duly calibrated every 6 months. Testing machine should be maintained properly. In case of failure, the same shall be repaired or replaced within 2 days.
5) Set of sieves.
6) Sieve Shaker.
7) Laboratory weighing balance of minimum 20 Kg capacity, with set of standard weights, from 1gm. to 5kg. & Electronic weigh balance with least count of 1 gm. with electric operated.
8) Aggregate drying equipments M.S Tray of 0.6 M x 0.45 M and kerosene stove or electric hot plate.
9) Equipment for testing of silt content in sand.
10) 12 Nos of cube moulds.
11) Slump cone.
12) Infra Red thermometer calibrated upto 250 degree Celsius (for checking asphalt/bitumen temperature).
13) Camber Board
14) Electronic thermometer calibrated at least upto 300 degree Celsius and glass thermometer calibrated upto200 degree celsius.
15) Field density bottle along with cutting tray, chisel, hammer and standard sand.
16) Bitumen Extraction machine / Bitumen core cutting machine.
17) Curing tank with adequate capacities.
18) Density gauge to check the field density of bituminous & sub base layers & soil strata.
19) Flakiness and elongation index Gauges.
20) 3m straight edge.
21) Any other machines / equipments as may be directed by the Engineer.

The laboratory shall be established ***within 30 days from the date of work order.*** On failure to do so, a ***penalty of Rs 50000/- per day*** shall be imposed. All materials used prior to establishment of lab are to be tested in B.M.C. Material Testing laboratory (M.T.L) / other B.M.C. approved labs.

All the test records shall be maintained in the site office & made available as & when required. The Engineer of the Contractor will conduct field density test periodically under the supervision of B.M.C. staff /any other consultant if appointed by B.M.C. & maintain the relevant in records.

6.112 Instruments to be provided:

The Contractor shall provide at his own cost for the exclusive use of the staff of the Engineer all survey equipment's& measuring instruments of approved make & of every kind necessary for execution of the work as and when directed by the Engineer, including:

a) Automatic Surveyor's level (01No) with horizontal 360 degrees circle, tripod with carrying case, all to the approval of The Engineers representative. The instrument shall be calibrated as & when instructed by the Engineers representative. The same shall be kept available at all times at the site chowky.

b) Two (2) Levelling staff 4.5 m long each in 3 sections & with attached bubbles graduated in meters & Tenths & Hundredth of a meter all to the approval of the Engineer.

c) 12 Nos of cube moulds and Curing tank with adequate capacities

d) Two (2) Surveyors Steel Bands of which one shall be 100 Mt. long & approximately 20 mm Wide& 1 shall be at least 30 Mt. long & 12 mm wide each fully divided.

e) Two (2) thermometers for taking temperatures of Asphalt mixes.

f) Any other instruments required for work as directed by Engineer.
Roadometers, Torches, measuring tapes of lengths @ 3 R.m, 15 R.m, 30 R.m, & 50 R.m of approved make.

g) First Aid box

6.113 Testing of Materials:

All requests for testing of samples must be made in writing in duplicate, specifying therein the following information (separate memo should be sent for cement, concrete, steel, soil, asphalt etc.). This includes testing suggested by third party quality assurance agency through the site in-charge at tenderer's cost in Govt. approved laboratories.

a) Name of the Work, Work Code No. if any.

b) Type of material and tests desired (i.e. grade of cement, date of Consignment).

c) Identification mark on the sample should be mentioned on the forwarding memo (in Case of concrete beams and cubes identification marks, grade of concrete, date of casting, specimen No. should be engraved on concrete. If these details are marked by paint, samples will not be accepted. In case of reinforcement bars, details shall be displayed on label pasted on bars and label must be signed by the officer, who has taken the samples).

a) Name and full postal address of the officer to whom the results must be sent.

b) Date of sampling (i.e. date of laying asphalt mix, Sr. No. of load casting concrete or taking cement samples).

c) Name of the contractor carrying out the work.

d) Any other information which is specified by the user department.

1. Samples must also bear the identification mark and signature of site in-charge taking the sample. In case of samples of asphalt mixes sent in polythene bags a legible duplicate tag should be stapled from outside.

2. Quantity of sample must be adequate as shown in the schedule, available with H.E.'s office.

3. Full testing fees as per schedule in force shall be paid in advance between 10.30a.m and 1.00 p.m. on working days except Saturday, and between 10.30 a.m. and 12.00 noon on Saturday. These fees shall be borne by the tenderer(s).

4. For issuing additional copies or duplicate copies Rs20/- or fees as prevailing rates will be charge for each copy. Request for additional/duplicate copy may be made in writing by site in charge or higher officers of the user department.

5. Cement sample should be forwarded in sealed airtight container with one lid on top not less than 10 cm. in diameter.

6. Moulds of concrete cubes/beams taken on hire shall be returned in clean, oiled condition with all nuts and accessories in proper position.

7. Sample for tensile testing of reinforcing bars shall be straight for entire length without bends. The ends of the bars shall be hacksaw cut and not chisel cut. One sample of each diameter bar shall be sent for first test and for retest two bars shall be sent. The length of the bars shall be 50 cm. for diameter upto 25 mm and 60 cm for dia equal to and greater than 25 mm.

8. Samples of bitumen, cut back, emulsions shall be forwarded in wide mouthed metal containers with label pasted on the lid.

9. Samples that are sent for testing natural moisture content shall be forwarded in wax coated packing or sealed airtight polythene bags.

10. Undisturbed samples sent in sampling tube shall be wax coated on both Open ends.

11. **Penalty**: The tenderers shall arrange to deliver A.M sample for testing to Municipal Testing Laboratory within 4 (four) days from the date of laying of asphalt mix on site. In case of delay, additional testing charges as penalty would be recovered from the contractor at following rates.

A) From 5th day to 7thday: Rs10000 / - per sample from date of laying

asphalt mix on site.

B) From 8th day to 14th day: Rs 20000 / - per sample from date of laying asphalt mix on site.

The above charges i.e. A & B shall be paid by the contractors at the time of submitting samples in Municipal Testing Laboratory. If the samples of A.M are not sent for testing within 14 days payment for the corresponding quantity of those samples shall not be made.

6.114 SPECIAL DIRECTIONS TO e-TENDERERS:

1. The subject work is underground &unforeseen, unplanned, unidentified nature may need to be carried out at various locations at the same time & also at adverse site conditions. The work is required to be carried within the restricted width and movement of very vehicular traffic is also required to be allowed abutting to the excavated trench. The contractor shall take utmost care/ necessary precautions/ preventive measures while carrying out the work so that vehicular traffic/pedestrians traffic shall ply safely and smoothly during the execution of work to avoid any mishap. If any mishap is happened during the execution of work the consequences of the same inclusive of legal and financial will be entirely contractor's liability and same shall be taken into account while bidding for the tender.

2. The subsoil strata may be silty/marine clay or silty clay with gravel and sand rocky strata is also likely to be encountered at some stretches of water main laying works.The depth of the excavation will be from 6 m to 8m there will be complex network utilities like high voltage power electric cables, sewer mains, SWD, water mains etc. Contractor has to take all precautionary, safety & preventive measures of protection to safeguard the underground existing utilities, structures & to protect the sides of the excavated trench from collapses & other necessary supporting works to avoid damages to existing utilities, structures & side collapses at his cost. Also contractor has to safeguard the plying of vehicles along the road from mishaps & accidents. Intending tenderer shall have to protect & support the sides of trenches during execution without any extra cost. No claim whatsoever arising out due to additional precautionary works which may requires to be carried out will not be entertained on any account. The bidder shall carefully evaluate these constraints & submit their bid accordingly. The tenderer shall take suitable measures to protect the sides of the excavated trench at his own cost till water main laying work including allied works are completed and trench is finally reinstated.

3. The tenderer shall take suitable measures to protect the sides of the excavated trench at his own cost till water main laying work including allied works are completed and trench is finally reinstated.

4. The tenderer shall note that the work of laying of various dia**.** D.I.W.M., Cross-Connections & its allied works are to be started simultaneously at multiple locations in C & D wards as directed.

5. The reinstatement of each stretch has to be started and completed immediately once the water main is hydraulically tested. If reinstatement is required to be carried out before hydraulic testing for any reasons whatsoever, the same will be allowed on submission of undertaking by the bidder regarding satisfactory hydraulic testing of the laid water main. In case of failure in hydraulic testing of the laid water main, the same will have to be rectified by the bidder including reinstatement at his own risk & cost.

6. Tenderer shall note that if the reinstatement work is delayed the tenderer has to take necessary steps to bring the excavated trench portion of the particular stretch in motor able and safe conditions at his cost and no extra payment for the above mentioned works will be entertained & appropriate penalty will also be imposed.

7. The tenderer shall note that cutting of existing cement concrete road pavement by using diamond saw machine will be paid as per tender item no. HE-8-27-a only. Diamond core cutter with the depth of 30 / 35 cm shall be used for uniform cutting of existing C.C pavements by the tenderer so as to avoid damage to the pavements adjacent to cutting area. If the adjacent cement concrete pavement is damaged by the contractor, the same shall be get rectified by the tenderer as directed at his own cost. No separate charges towards supplying water & electricity for the said work will be entertained / considered on any account.

8. If required, the successful tenderer has to carryout sub soil investigation and total station survey before/during the subject work and should submit the report to BMC. The tenderer should note that no any payment will be made for sub soil investigation test and total station survey.

9. **In case of non-satisfactory / failed results of 28 days concrete compressive strength, if 28 days concrete cube compressive strength test sample strength at MTL/NABL accredited labs are not satisfactorily/failed; in such circumstances re-assessment of strength of concrete shall invariably to be done only at Municipal Testing Laboratory(MTL)by joint witness by the officer not below the rank of Assistant Engineer of the project and the representative of the contractor for assurance and acceptance of the strength of concrete work.**

6.115 SPECIAL CONDITIONS OF CONTRACT

1. The work is required to be executed at one / multiple locations. The contractors will have to obtain permission accordingly from the Traffic Police department/Railway Authority /BMC ward office well in advance either for closing down the road partially/fully or for diversion of traffic for execution of the work, The contractors should therefore consider this factor while quoting.

2. The contractor shall have to obtain all the permissions of the concerned authorities of BMC / other than BMC required for carrying out the work. Only recommendatory letters will be issued by

B.M.C. All the terms & conditions mentioned in the said NOC's/Clearance given by concerned authorities other than BMC will be binding on the contractor & contractor has to comply all this terms & conditions before & during the execution of the work. However, no any claim shall be entertained regarding expenses incurred on account of obtaining above mentioned NOC's/Clearances/Permissions/Consents. Tenderer shall note this aspect and quote their rate accordingly

3. Quantities of all items provided in the B.O.Q. may not be required to be executed depending upon the site conditions. For procurement of materials before starting the work, contractor shall take actual measurements on the site as per tendered work, contract period &get himself acquainted with existing site conditions. The tenderer shall not be entitled for any compensation on this account such as excess procurement of pipes, valves...etc
4. The contractor shall procure all material required for the work from manufacturers with I.S.I certificates and according to B.M.C specifications/approved list wherever applicable.
5. Corporation may appoint a consultant for quality audit, during execution period. The contractor will extend all help in carrying out any survey; test etc. as directed and adverse decision there of including rectification shall be carried out by the contractors at their cost.
6. All material required for the work can be stacked near the site of work in such manner so as not to cause any inconvenience to the pedestrian and vehicular traffic. If no space is available on site then tenderer shall make his own arrangement for stacking of material etc. No extra payment will be made on this account.
7. The contractor should note that during the execution of the work the excavated material will have to be removed immediately after completion of the work as per direction of the Engineer, failing which the same will be got removed at their risk and cost. The site shall be cleared by removal of surplus material within 24 hours after refilling the excavated trench.
8. **As per directions given in the circular u/no. Dy. Ch.Eng./SWM/3957/op dtd. 28.09.2018 contractor has to dispose of C&D waste generated either by (i) 'debris on call' scheme if generation of C&D waste is less than 300 MT for entire project. or (ii) Contractor shall transport to designated unloading site approved by BMC SWM department by following due procedure if C&D waste is more than 300 MT for entire project.(Page no.260)**
9. The Contractor should note that Running Bill/Final Bill of project works shall be accompanied with GIS Mapping Certificate as per Circular no. CA (F)/EXP/FI/22 dated 30.09.2019.**(pg. 267)**If any Running Bill / Final Bills not accompanied with GIS Mapping Certificate, the same will not be accepted for payment. Also, GIS Mapping conditions under no. EE/WDIP/SR/51/DT. 15.06.2023 & EE/WDIP/SR/53/DT. 22.06.2023 **(Pg. 280 to 283)**is applicable for this tender.

10. Tenderer shall note that in respect of the Grievance Redressal Committee (GRC) policy circular u/n DY.ChE/CPD/2025 dt. 01.09.2021 andCh.E(Vig)/436/B dt. 18.05.2023 shall be applicable (pg.no.277 to 279).

11. The Tenderer shall take note of the GST circular issued u/n.CA/F/Project/28 dt. 28.03.2023. (Copy attached at pg no. 274 to 276). Any modifications to this effect will be applicable to this bid. However it shall be noted that rates of exclusive of G.S.T. and applicable G.S.T. will be paid over and above the rates quoted by bidders.

12. The execution of any items mentioned in the BOQ may not be required to be operated during execution and contractor shall not claim regarding non execution of these items.

6.116 Concrete Works:

1. All concrete works shall be carried out by Ready Mix Concrete / unless otherwise specified in respective items.

2. Testing for compressive strength of concrete works shall be carried out as per the Quality Assurance Manual, or as directed by engineer in-charge. Twelve cubes (150 mm x 150 mm x 150 mm) shall be cast & tested for compressive strength for 7, 14 & 28 days at the site laboratory. For concrete of grade M 35 or higher, corresponding three flexural beams (700 mm x 150 mm x 150 mm) for flexural strength of 28 days shall also be cast & tested, for every day's work at the laboratory attached to the R.M.C. plant. In case of failure in compressive strength for 28 days, the remaining three cubes shall be sent to the municipal laboratory or any other laboratory approved by Ch.E (Rds& Tr.), as directed by engineer in-charge for re-testing.

3. Besides, once in a month, compressive strength for 7, 14 & 28 days & flexural strength for 28 days (for concrete of grade M 35 or higher) shall be carried out at municipal laboratory or approved laboratory as directed by engineer in-charge.

4. The temperature of Pavement Quality concrete shall be maintained as per IRC: 15:2002. Concrete having temperature at the time of pouring more than 30ºC will not be allowed.

5. The tenderer should note that channels (form work) of specific sizes (150mm, 280 mm or 300 mm or 350 mm) may have to be manufactured as per the design of concrete pavement slab for which no extra payment will be made and tenderer has to quote his % rate accordingly.

6. The contractors shall make necessary arrangement for adequate lighting during night-time& as per the conditions insisted by Traffic police department N.O.C for the work. No extra claims will be entertained for the same.

7. ~~List of approved Paver block manufacturers/ Asphalt Plants/ R.M.C. Plants etc. have been incorporated in this document. However, B.M.C. reserves right to modify these lists.~~ The updated list of approved paver blocks manufacturers at "the time of execution of works" shall be obtained from the Dy. Chief Engineer (Roads) City / E.S's office.

8. All the asphalt works required to be done under the captioned contract shall be got executed with the specified asphalt mixes manufactured in B.M.C. approved asphalt plants only.

9. All the Paver blocks/ Kerb stones/ Water tables/ Frame & covers required for the works to be carried out under the captioned contract shall be procured from the specified manufacturers registered with B.M.C. only and also the interlocking paver blocks shall have BIS registration.

10. The RMC works required to be done under the captioned contract shall be got executed with pre-qualified / approved RMC plant by B.M.C.

6.117 Traffic Management:

1. The contractor shall have to provide adequate number of wardens as per requirement of Traffic Police Deptt. at the contractor's cost.

2. Traffic signs – Temporary traffic and construction signs are to be provided during construction and maintenance operations for traffic diversion and pedestrian safety as per Traffic Diversion Plan.

3. The contractor shall display the boards stating information of the name of the work, date of starting, date of completion, name of the Deptt. and contact telephone no's of Contractor's Engineer.

4. While constructing/improving footpath, provision for sloping ramp of at least 1m width or as directed, shall be made at every carriage entrance, junctions, bus stops etc., for convenience of physically challenged persons.

5. The full time services of the Personnel Team of the contractor is mandatory during the entire period of the project.

6. Diameter of the S.W.D pipe & sizes of manholes provided in the bill of quantities of the tenders are tentative & are likely to change at the time of execution according to the site conditions. Contractor's shall have to carry out such extra items in S.W.D works as per S.W.D schedule rates of B.M.C prevailing at the time of execution of work or as per G.C.C adjusted by rebate/ premium quoted by the contractors and no fair rate will be admissible for the same.

7. The photographs of work sites & works as and when directed by Engineer are to be taken. A new Digital Camera of Min 10 Mega Pixels shall be provided in the site office for the said purpose. The Photographs should be arranged in the Album/ Register showing the relevant activities executed on site.

The register should be duly signed by site-in-charge and contractor fortnightly. All photographs may require to be uploaded as & when directed to do so.

6.118 Price Variation:

Please refer "price variation" clause no. 79 & 80 of Section 9 GCC.

~~a) As the time period of the project is **12 months (Including monsoon)**, hence any variation in the rates of labour and materials shall not be considered for reimbursement to the contractor. The bidder shall note this aspect and submit their bid accordingly.~~

b) The bidder shall note that as the time period of project is **18 months (Excluding Monsoon),**hence the cost contingencies/ price variation for labour & materials shall be considered as per circular under no Dy.Ch.E/WSP/CI/08/3387 dated 02.01.09 and will be paid as per indices issued by competent authority considering the relevant clauses of **G.C.C. in force** & amendments thereof by the BMC from time to time. However, maximum limit for reimbursement is **5%** of the contract cost (including extra items/excess quantities but excluding water/ sewerage and supervision charges & physical and cost contingencies. The bidder shall note this aspect and submit their bid accordingly.

6.119 Every running bill submitted by the contractor for payment shall be with the detailed measurements recorded for each item.

6.120 Contract Labor (Abolition and Regulation) Act 1970: The Tenderer(s) should specifically note that the successful tenderer shall have to strictly comply with all the statutory requirement under the provision of the Contract Labor (Abolition and Regulation) Act 1970 and with the Maharashtra State Contract Labor (Abolition and Regulation) Rules 1970 and indemnify the Corporation against any claim(s) whatsoever.

6.121 Royalty Payment on excavated material as per statutory requirement:

The contractor shall pay necessary royalties as and when royalties becomes payable to the government authority on excavated material as per statutory requirements. The payment towards royalty charges shall be made by the contractor& it will not be reimbursed by B.M.C. The evidences of such payment shall be submitted for record purpose.

6.122 If the contractor carries out excavation for any tender / additional work allotted &fails to reinstate the same within the stipulated time limit, as per the program and or before 15thof May OR any

other date specified by the B.M.C authority, the reinstatement will be got carried out at contractor's risk and cost through other agency in addition to further penal action.

6.123 The noise level shall be maintained within the permissible limit in Silence zone area during the construction activities by the Contractors, as per the notification dated 14.2.2000, issued by the Ministry of Environment & Forests.

6.124 The contractor shall maintain copy of the following registers as applicable during execution of work and it is mandatory to provide Laptops / Desktops to the Site Engineers for the same. The List of Registers / Records / Files etc to be maintained is as under:

Sr.No	***Name of Register / Records / Files***
01	*Daily Progress Register*
02	*Excavation Register (Soil, C.C, Road carriageways, Rock ... etc)*
03	*Correspondence File*
04	*External & Internal utility remarks File*
05	*Permission File (Ward / Traffic / Chowky / C.C.Road ... etc)*
06	*Permission File (Other utility letters viz S.P, S.W.D, S.O, B.E.ST, TATA, M.G.L, M.T.N.L, Railway, Mb.P.T, M.S.R.D.C, M.M.R.D.A ... etc)*
07	*O/C File*
08	*Drawing File*
09	*Instruction Book / Register*
10	*Level Book if required*
11	*Mix Design Approval File if required*
12	*Test Report File (Cement, Sand, Brick, Metal No 1, Metal No 2, Metal No 3, Rock ... etc)*
13	*Test Report File (Sluice Valve (S.V), Butterfly Valve (B.F.V), Air Valve ... etc)*
14	*Test Report File (Paver block, G.S.B, W.M.M, D.L.C, M40 RMC ... etc)*
15	*Test Report File (Asphalt Macadam, Asphalt Concrete ... etc)*
16	*Test Report File (Pipes, Welding ... etc)*
17	*Pipe Laying Register*
18	*Form Work / Shuttering Register if required*
19	*Encasement Register if required*
20	*Cement Variation Register if required*
21	*Cement Register*

22	*Sub base & W.B.M Register if required*
23	*Asphalt Macadam, Asphalt Concrete Qty Register if required*
24	*Asphalt Macadam / Concrete Challan File if required*
25	*G.S.B, W.M.M Register if required*
26	*D.L.C Register if required*
27	*Duct Pipe / Lateral Register if required*
28	*Steel Register if required*
29	*M10, M15, M20 C.C Qty, Cube, Variation Registers*
30	*M10, M15, M20, M35 / M40 RMC Qty, Cube, Variation Registers*
31	*R.M.C. Challan File if required*
32	*Pour Card Register if required*
33	*Joint Cutting Register if required*
34	*Precast Item Register (Paver blocks, Kerb stone, Dividers etc) if required*
35	*Precast Item Challan Register if required*
36	*R.T.I. Correspondence File if required*
37	*Vigilance Reply File*
38	*Railway Correspondence File if required*
39	*Isolation Memo File*
40	*Hydraulic Testing File*
41	*Handing Over File*
42	*Photograph File / Album / Register*
43	*Penalty Register*
45	*Sand Metal Register if required*
46	*M8 Register if required*
47	*Any other registers required as per description of items for any activity / material / quantity for which payment is made or as instructed by B.M.C staff.*

6.125 <u>IMPORTANT POINTS TO BE NOTED BY THE TENDERER:</u>

1. The successful tenderer/ Contractor have to co-ordinate between the third party quality assurance agency, if any, and the B.M.C. staff for the quality execution of work.
2. All materials required to be used for execution of the job shall be got tested as directed by third party quality auditor, if any, through the site in-charge before use.
3. The contractor shall prepare all the relevant site records/registers & duly update the same in consultation with the site in-charge.

4. The jobs allotted to the contractor for execution is to be executed to the satisfaction of the third party quality assurance agency if any and the B.M.C. The contractor to note this pointand plan the execution of work carefully.
5. The completion reports for various activities along with its drawing are required to be submitted to the BMC immediately after execution of the job.
6. It is suggested to the contractor that the contractor may make necessary arrangement for testing of the water main.
7. The overall quantum of the work may vary to any extend and if the scope of the work is reduced to any extent, the contractor shall not claim any compensation and no payment will be made towards claim/ compensation. If the quantum of the work get exceed tender amount, the contractor has to execute the work for additional amount at the same quoted percentage. This point shall be considered while quoting the tender.
8. **For extra/excess prior administrative approval of the competent approving authority mentioned in the circular u/no. CA(F)/Project/31 Dt. 26.10.2020 is mandatory for execution of extra/excess work. However, if quantities of excess items executed in the work is less than 5% prior/post facto approval of the competent authority shall be obtained.**

However, prior administrative sanctioning authorities for excess/extra/saving are as per following table:-

Nature of work	**Permissible limit of Extra/Excess/Saving and approving authority**		
General work/Undergro und works/Unforesee n works	**DMC(Infra)/DMC(E)/DMC(SE)/Dir(es& p)/Jt.M.C.**	**Concerned A.M.C.**	**Municipal Commissioner**
	(i)Cumulative amount of Extra/Excess/Saving in any individual item upto Rs.25 Lakh and (ii) Total cumulative amount of Extra/Excess/Saving on all items upto 5% of the total contract cost, but not exceeding Rs. 1 crore	(i)Cumulative amount of Extra/Excess/Saving in any individual item upto Rs.1 crore and (ii) Total cumulative amount of Extra/Excess/Saving on all items upto 15% of the total contract cost, but not exceeding Rs. 10 crore	(i)Cumulative amount of Extra/Excess/Saving in any individual item above Rs.1 croreand/OR (ii)Total cumulative amount of Extra/Excess/Saving on all items above 15% of the total contract cost, And/OR Cumulative amount of Extra/Excess/Saving in on all items exceeding Rs. 10 Crores

9.

Nature of work	**Permissible limit of Fair Item and approving authority**		
For all nature of work	**DMC(Infra)/DMC(E)/DMC(SE)/Dir(es& p)/Jt.M.C.**	**Concerned A.M.C.**	**Municipal Commissioner**
	Total cumulative amount of Fair on all items upto 2% of the total contract cost, but not exceeding Rs. 20 Lakh	Total cumulative amount of Fair on all items upto 5% of the total contract cost, but not exceeding	Total cumulative amount of Fair on all items above 5% of the total contract cost. **And /OR** Cumulative

		Rs.1crore (Other than the proposals in the purview of DMC/Jt.MC)	amount of Fair on all items exceeding Rs. 1 Crore.

For extra/fair items if any prior administrative approval shall be obtained from the AMC(P) & maximum limit is 5% of total contract cost.

Contractors are informed that the circular under reference is issued for the propose of having financial discipline on the work hence whenever the quantity executed to the extent of 80% of BOQ quantity will be intimated to Site In Charge before executing the work on site & or submission of R.A. bill for the said work. The extra/excess beyond the BOQ quantity are likely to be operative, the contractor need to take prior approval of competent authority. Any amendment in circular mentioned above during the time period of this tender will be applicable. The foreclosure of work due to above circular &reason will not be the cause of claiming compensation of this work.

6.126 <u>Special Notes:</u>

1) The pipe fabrication factory must have facility of automatic welding machine and hydraulic testing set up.
2) The spiral welding is not allowed for M.S pipes.
3) The contractor has to make arrangement for factory visit if instructed by Engineer in Charge Municipal staff at his own cost.
4) The contractor has to lay as far as possible the water mains at fixed level by diverting the utilities if required. Also preferably bends to be used while laying w.m. should be less than of 45 degree.

For extra item, if required to execute, any unforeseen work as per site conditions, HE's Schedule of rates will be mainly considered for the payment of work with proper sanction from DMC (SE). However, if the items are not available in HE's schedule those item will be paid as per the items of other BMC Schedule of rates & as stipulated in the relevant clause of G.C.C. If the items are not available in any of the B.M.C. schedules, then fair rate will be prepared as per prevailing market rate with 15% contractors profit inclusive of overheads and duly got verified by Account Office. For fair rate approval from DMC (SE) shall be obtained before execution of work or afterward as the case may be.

Contractors will be asked to refill the trenches with excavated earth with proper compaction as specified in clause PL 52 of Technical Specifications and reinstatement of Road surface to its original road surface. The width of road surface to be reinstated will be restricted to the trench width plus 15 cm on either side or as directed. The contractor has to maintain the reinstated trench and reinstated road surface till the defect liability period of the contract period is over at his cost. Any settlement of reinstated trench and/or reinstated road surface is observed during this period shall be redone within 7 days by contractor's at his cost failing which it will attract penalty equivalent to the cost of

reinstatement (at quoted rate) of the portion per week or part thereof or as per the policy guidelines for re-instatement of trenches and the same will be recovered from the contractor's bill. However, during monsoon period if any pothole / settled trench is observed, it shall be binding on Contractors to attend it within 24 / 48 hours as the case may be and as directed by the Engineer.

6.127 SITE INSPECTION:

Before submitting the tender, the Tenderers / Contractors shall inspect and acquaint himself about the site of construction with its site constraints. They shall also collect such information as they may deem necessary for the proper execution of the works. They shall obtain further clarification, if any, on any specific issue from the office of E.E.W.W (Const) City, First Floor, Engineering Hub building, Worli, Mumbai-400018 before submitting the tender. Tenderers / Contractors should note and study the condition related to site constraints and its impact.

6.128 SITE CONSTRAINTS:

The Tenderers / bidders should note following points carefully before quoting:

1) ***For execution of proposed subject work along with its various allied work within contractual period the bidders has to carry out the work at number of locations as directed. Department will apply for necessary permissions to traffic department / Tree Authority / concerned B.M.C ward& any other agency as may be required. However, necessary follow ups shall have to be made by the contractor to get the permissions so as to start & complete the work within stipulated time period. Getting aforesaid permissions will be entirely contractor's responsibility for which the required help will be provided by B.M.C. Also, the directions of authority concerned with regards to traffic diversions / for any other purpose will be binding on the contractor..***

2) While carrying out the work, contractor has to ensure safety of existing utilities of B.S.N.L, B.E.S.T, TATA, SCADA, M.G.L, optical fibre cables, Sewer lines, S.W.D & Water Mains of Hydraulic Engineer's Department etc. contractor has to take care of all his Machineries and transport vehicles while executing the work without disturbing traffic flow on remaining carriageway of road. If any damage occurs to any immediately and no extra payment will be made to the contractors.

3) Existing Cross Drainage work/HT cables /High voltage/oil filled TATA cables/ Drains etc may required to be crossed by way of diversions or by deepening the pipeline as directed. Utmost care should be taken while carrying out such works to avoid the damage to the existing utilities. If any damage occurs to any of the utility, same will have to be repaired /reinstated by the contractor at his cost immediately and no extra payment will be made to the contractor.

4) It is to be ensured by the contractor that all valve chamber covers shall flush with the top of the existing road.

5) Due to paucity of space and to ensure better & consistent quality, it is necessary to provide Ready Mix Concrete (R.M.C) for the concreting works required for the project or as the case may be.

6) Very hard rock is likely to be met with in certain stretches which will have to be necessarily excavated mechanically. This must be done by deploying sufficient no. of Poclain or any other mechanical means (L&T KOMAT'SU PC 300 LC OR equivalent or higher in capacity) considering available access point to the strip of land for laying of pipeline, all in commensuration with time constraints for execution of total work. No blasting including controlled blasting will be permitted under any circumstances. The contractor may be required to deploy power driven rock splitters or chemicals like Acconix or equivalent for breaking the hard rock.The bidder shall carefully evaluate this constraint before quoting the rate under this item of work.

7) The warranty period of valves will however commence from the physical completion of entire work under the contract.

8) The bidder shall note that he will have to arrange for security and safety of Municipal and his own staff working at the site & materials stacked at / near to sites during the whole contract period and the cost of same shall be deemed to have been covered under items of the contract. The bidders/Contractors should note that, no claim whatsoever arising out of the ignorance of site conditions etc. submitted later on, will be entertained on any account.

9) As stated in scope of the tender, this tender covers the work of providing and laying of various dia. water mains& its allied civil works. The work of interconnections / cross Connections of various dia. water mains shall have to be done in restricted time limit as the existing water mains are live ones and it is to be carried out only after isolation for very restricted time period is permitted by Hydraulic Engineer.

6.129 ASSISTANCE FOR THE ENGINEER'S STAFF:

The Contractor shall provide all necessary assistance to the Engineer's Representative and his staff in carrying out their duties of checking, setting out, inspecting and measuring the works. The Contractor shall provide surveyor, staff men, office attendants and labourers as may be needed from time to time by the Engineer.

The Contractor shall provide for Engineer and his staff protective clothing, safety helmets, rubber boots of suitable sizes, hand lamps, and the likes as may reasonably be required by them. These articles shall remain the property of the Contractor. No separate payment shall be made on this account.

6.130 SAFETY MEASURES AND SERVICES:

The Contractor shall be responsible for the safety of all workmen and other persons entering the works and shall take all measures necessary to ensure their safety to the approval of the Engineer's Representative. The guidelines are as under:

a) Display of proper safety and emergency regulations; fire, gas and electric shock precautions, provisions of stretchers and first aid boxes together with rescue facilities for each place of working.
b) Provision of efficient safety helmets for all personnel including the Engineer's Representative and each of his staff and any authorized visitors.
c) Safe control of water, including provision of ample standby generating and pumping plant;
d) Provision and maintenance of suitable lighting to provide adequate illumination of works with appropriate spares and standby equipment;
e) Provision and maintenance of safe, sound mechanical equipment each item of plant having an up-to-date test certificate;
f) Provision and maintenance of safe, sound ropes, slings, pulleys and other lifting tackle, each appliance having an up-to-date test certificate where appropriate;
g) Provision of notice board 1.25 m x 1.5 min size, written in bold letter in English, Marathi and Hindi, to be erected on existing footpaths and points of access likely to be used by the public, which shall warn the public.

6.131 IDLE CHARGES:

No idle charges will be entertained on any of the grounds

6.132 PENALTY CLAUSE:

a) The Engineer not below the rank of Assistant Engineer is entitled to impose a penalty of Rs. 5000/- per day/lapse, in accordance to the gravity of default communicated in writing. Penalty amount will be recovered from contractors running bill. This penalty is over and above penalty mentioned under G.C.C.

If it is observed that, the contractor carrying out the work fails to comply with the instructions given by the authorities of the Dy.HE (Const)/H.E/D.M.C (SE) /A.M.C/M.C.'s level during execution of work twice, the work may be terminated and will be carried out at the risk and cost of the contractor and penal action will be taken against them. This decision will not be arbitrable at all.

The abovementioned condition will be in addition to the relevant condition in the General

Condition of contract regarding cancellation of contract in full or partly final decision of disputes, difference of claims raised by the contractor or relating to any matter out of contract.

Penalty shall be levied & recovered from contractors running bills as stated below. This penalty is over and above penalty mentioned under G.C.C / other Terms & conditions mentioned in this tender.

Sr.No	***Reasons***	***Amount of Penalty***
1	*Work not as per specification/defective work*	***20% of cost of defective work. The defective work is to be redone/rectified.***
2	*Lapse in execution of work as discussed & finalized during the quarterly review meeting of the work at site.*	***Minimum Rs 10000 / - per day & then Rs 5000 / - per day***
3	*Not following / disobedience of orders issued by site incharge or other visiting officers of the B.M.C.*	***Rs 5000 / -per day***

In case of failure of asphalt mix sample testing in Municipal Testing Laboratory in various tests the following penalties will be imposed.

Sr. No	***Particulars***	***Penalty***
1	*Gradation Failure in asphalt macadam(AM), asphalt concrete(AC), seal coat(SC)*	***Rs. 5000 / -***
2	*Gradation failure in mastic asphalt (MA)*	***Rs. 5000 / -***
3	*Failure on more than three(3) gradations in AM,AC,MA*	***50% of the cost of the work done representing the sample***
4	*Failure in flow value, bulk density, void ratio, marshal stability*	***Rs1000 / -***
5	*Excess bitumen content beyond specified limits*	***Rs.150 / - per M.T for the work representing the sample.***
6	*Less percentage of bitumen content in asphalt mix/es.*	***50% of the cost of work representing the sample.***
7	*For other materials failure*	***Rs 5000 / - per material per failure***

Other penalties

In addition to any penal action under the General Conditions of Individual contracts, a registered contractor will be liable under the registration rule to one or more of the following penalties:

a) Warning / Fine

b) Demotion

c) Deregistration

a) **Warning / Fine**

A contractor will be liable to a warning and /or penalty for:

1. Non-compliance of any provision of the rules.

2. Failure to comply with any clause or direction under these rules or comply with any conditions of tenders / contracts.

3. In adequate progress / performance under the contract.

For the first default of any type mentioned above a warning will be issued. For each subsequent default of the types in (1) & (2) above the minimum penalty will be fine of ***Rs 2500/-*** while that for a default of the type (3) the minimum penalty will be ***Rs 5000/-*** for contracts of upto Rs 25 Lakhs and ***Rs 10000/-*** for contracts of above Rs 25 lakhs. Higher Amount of penalty may be levied by the competent authority for reasons to be recorded**.**

b) **Demotion**

A contractor will be liable to be demoted to a lower class of registration on any of the following grounds:

1. Specific failure or default in execution of individual works in respect of physical progress for quality of such works.

2. Inadequate performance as revealed by quarterly performance report.

3. Deterioration in financial or technical ability /capacity.

4. Repeated failure to fill in tender documents fully and correctly or delay in execution of formal contract documents.

c) **Deregistration:**

A contractor will be liable to be deregistered on any of the following grounds.

1 Attempt to defraud the Corporation.

2 Attempt to bribe any employee / officer of Corporation.

3 Attempt to secure a contract through unfair means or by bringing to bear outside influence.

4 Attempt to secure unauthorized copies of Municipal Records, any documents in relation to any tender / contract or any other official matter.

5 Furnishing or tampered with Municipal record and documents**.**

6 Furnishing false and / or misleading information to registration and / or any tender / contract.

7 Threatening, Misbehaving with or physical attack on any Municipal Employees / officer.

8 Attempt to instigate or collude with other contractors with a view to securing undue advantage.

6.133

Condition for updating of works on BMC GIS (EE/WDIP/SR/51 dt 15.06.2023 and EE/WDIP/SR/53 dt 22.06.2023)

1) Contractor has to capture digital photographs and Geo coordinates (i.e. Latitude and Longitude) of each work (during execution of the work) In the following manner:

a) Contractor shall use latest GPS equipment in DGPS mode (RTK/PPK) for capturing Latitude/Longitude coordinates of Water Network Assets, which are compatible to the MCGM's existing DGPS Setup to get desired data quality.

b) The GPS coordinates shall be captured strictly in the presence of the concerned MCGM Site in charge. The photographs of the process of capturing the Geo coordinates with the help of latest DGPS Machine shall be taken and submitted as part of records to the concerned EEWW(Const).

c)The contractor shall capture the coordinates of water network assets and post process the DGPS Rover data in back office and generate "shape file" format using the 10-point character for attribute table as attached which is mandatory for uploading on One MCGM. Reference coordinates for shape file shall be WGS 1984 UTM 43N.

d)For water mains, contractor shall capture Geo coordinate in the following manner:

i)At start point, at every turning point and end point.

ii)Every bend shall be captured at both the ends to confirm the direction of water main.

iii)For straight alignment of water main, Geo coordinates shall be taken at every 50m interval.

iv)The coordinates of all Cross-connection points, Sluice valves, Valve chamber, BFVs, Air valves, Hydrants, Reducer, End cap, Manhole chamber, shall also be captured.

e) In congested area where network is not available or poor, submission on Google Earth can be accepted for WDIP work only and not for laying work.

2)The contractor shall enter the field attribute data in the asset format attached and submit along with shape file for GIS Mapping Certificate.

3)a) Wherever necessary the contractor shall carry out TSS survey of Road where laying of water main work is to be executed. For TSS, use nearest MCGM's GCP monuments (total 24 monuments are available across Greater Mumbai) for reference.

b) For TSS survey. The contractor shall use UTM 43N using local datum (THD values from the nearest pillar) as directed by MCGM. Three-point location should be given with field attribute

data as per Asset formats attached along with the shape file and submit to the department. All water related features i.e. Pipe lines, valve chamber, hydrant, air valve etc. shall be marked on TSS with reference to urban vicinity features such as land mark, bus top, electrical poles, sewer main holes etc.

4)Tenderer shall also submit a certified hard copy of the surveyed data on Google earth map. It is also mandatory to submit detailed schematic sketch signed by concerned construction staff for assets such as cross connection, water main, diversion, reducer and service connection.

5) The attribute data of the H.E.'s assets shall be filled up in the prescribed formats as attached by Concern Contractor's representative and the site in charge, which shall be endorsed by concerned Executive Engineer.

6)The completion drawings shall be prepared using HE's existing GIS data/One MCGM portal available with Executive Engineer (Construction).

7)After completion of work, the geo spatial data in "shape file", along with attribute data in prescribed formats as attached, shall be submitted to EE(WDIP) for updating in H.E.'s GIS database within two months, failing which a penalty of Rs. 500 per day will be recovered from the contractor.

8)It is required to capture the geo spatial data on exposed main while carrying out the work for better accuracy in order to update HE's GIS data.

9)Tenderer shall note that, 5% amount of the total work done will be withheld for GIS work. The 5% deposit withheld will be released only after GIS Mapping Certificate is received from MWDIP department. This 5 %retention shall be in addition to the amount retained as retention money and amount withheld as per vigilance circular. Running bill/final bill shall be accompanied with GIS Mapping Certificate as per circular CA(F)/EXP/F1/22 Dated 30.09.2019.

10)The contractor shall note that no separate payment will be made for capturing GPS coordinates, carrying out TSS survey wherever required, and submission of photographs, CD of Auto CAD &shape files etc.

6.134 Tenderer shall note that policy guidelines issued under Hon. M.C.'s circular vide no. MBC/6913 dtd 05.05.2020 for engaging labour for providing reservation shall be applicable to the contract work under reference.(Copy at pg.286-287)

6.135 Tenderer shall note that revised policy under Hon. M.C.'s circular vide no. CA(F)/Project/31 dtd. 26.10.2020 for governing extra excess and saving shall be applicable to the contract work under reference

6.136 Tenderer shall note that no extra payment shall be made for local transportation of MS pipes and MS specials at site and rates are inclusive of transportation and lowering in trenches

6.137 The intended tenderer shall note that office estimate is prepared as per USOR 2023 (Excluding G.S.T.) and GST Circular guidelines issued under number CA/F/P/28/ dtd 28.03.2023.Any modifications to this effect will be applicable to this bid. However it shall be noted that rates of exclusive of G.S.T. and applicable G.S.T. will be paid over and above the rates quoted by bidders.

6.138 The Contractor shall be solely responsible for safety of the workmen, Engineer's staff and third party. The contractor shall implement a comprehensive safety plan for his work people and Engineer's/ Employer's or third party. He shall comply with all relevant acts governing safety on construction site. He shall submit to the Engineer the details of the arrangement he made with the fire brigade, local health authorities and the availability of medical staff, first aid equipment ambulance, sick bay etc. He shall give the names and contact telephone numbers (24 hours) of the occupational health and safety personnel. Besides he shall submit a list of safety equipment that he would provide to all workers on site. The Contractor shall appoint a Safety Officer or Safety Engineer at all times who shall be the responsible person for all safety related matters pertaining to the contract. Name of such person shall be communicated along with the submittals on safety. The contractor shall comply with the guidelines issued by any competent authority regarding safety at work site especially safety of persons working inside any pipeline new or functioning. The Contractor shall provide & maintain proper signboards, warning lights, beacons, barricades, lighting, fencing etc. at sites. Any accident/ mishap arising from the non-observing of safety measures will be sole responsibility of contractor.

6.139 Tenderer/bidder shall have to obtain NoC's from relevant authorities if applicable to carryout the said work.

6.140 The appointed agency has to take measures and implementation of Mumbai's Air Pollution mitigation plan issued under no. MGC/A/1386, dated 13.03.2023.(Pg, No.284).

6.141 The appointed agency has to follow the circular issued under no. HE/01/Cir, dated 11.05.2022.

6.142 The appointed agency has to follow the circular issued under no. HE/01/Cir. Dt. 11.05.2022regarding certification of work executed

6.143 The bidders shall note the circular u/n. CA/Finance/Project/19/dt.04.03.2024.

6.144 Quality Engineer of RMC Plant and contractor's engineer shall be present during execution of rapid hardening concrete on site for ensuring proper quality.

6.145 Dy. H.E./H.E.'s prior approval shall be obtained to execute /operate the R3-RW-10-70 (Rapid Hardening Concrete) item in monsoon as per circular u/no. Ch.E/753/MC/ rds& tr. dated 26.06.2024.

6.146 Proposal regarding the reinstatement work of trenches through H.E. contractor and use of sand metal for that R.I. work is approved by Hon'ble AMC(P) u/no. AMC/P/2577 dated 08.08.2024. The quantities required for R.I. work is considered accordingly. However, in case of trenches taken in Project Roads, if RI is done by Roads Dept, quantities considered in this tender for RI items may not be utilised and related amount will be considered for Saving. Any claim from Contractor in this regard, will not be entertained and considered at all at any stage of work. The Contractor should note this and should quote accordingly.

6.147 While executing the item of Sand Metal (R3-RW-10-24), Contractor appointed any engineer should be present on each site. Laying of sand metal should be done preferably during working hours (Day time). It is mandatory to maintain Timestamp Photograph while laying of Sand Metal in presence of Contractor's appointed Engineer for each task with measurements. Bidder should note that, if photographs as mentioned above is not found maintained for each task no payment for the said item will be made. Concerned S.E. to ensure execution of Sand Metal on site and see that photograph of each task as mentioned above and challans are properly maintained in record before making payment for the same. Concerned A.E./E.E. May check laying of Sand Metal by taking random trail pits and photographs of trail pits should be maintained in record. If it is observed that the reinstatement of trench is done without Sand Metal, penalty of equivalent amount will be imposed on the contractor and the entire trench will be removed and redone. If repeated lapse observed action as per tender condition & G.C.C will be proposed which please may be noted.

6.148 Tenderer shall note that, provision of Item No. R3-RW-10-29(RMC M 40) is considered in BOQ for Reinstatement of trenches in CC carriageway. It is mandatory to operate item for Reinstatement of trenches in CC carriageway irrespective of the quantity for each task in order to attend the daily assigned work in time.

6.149 SPECIAL CONDITIONS OF THE CONTRACT FOR EXECUTING MICRO TUNNELING WORK IN RAILWAY PREMISES

Part 1 General

1.1 Specification

These specifications are intended for general description of quality and workmanship of materials and finished work. They are not intended to cover minute details. The work shall be executed in accordance

with best modern practices and using special techniques of trench less technology. The Contractor shall read this Specification in conjunction with the standard specification of the Municipal Corporation of Greater Mumbai for water pipe line works.

1.2 Contractor's obligations

The clauses in this section are meant to provide general guidelines and compliance requirements to the Contractor. It does not however relieve the Contractor from taking every other step and precaution as deemed necessary to complete the installation of the pipelines successfully within the specified contract period and the bided amount. Micro-tunneling and pipe jacking and any other methods under trench less technology domain are the Trench less Techniques adopted for minimizing excavations and avoiding conventional trenching. Unless otherwise provided or permitted Micro tunneling and Pipe jacking should be considered to be the method required to be adopted for laying the pipelines under the contract. Any other trench less method may be permitted in case of packages where such methods are found essential as per the conditions prevailing at the time of execution with prior approval by the Engineer without any extra cost to the Employer. However, the Contractor shall be solely responsible for adequacy and safety of any of the techniques to be used. The objective of the work in general is to provide alternative pipe lines at higher depths below ground and / or nallah bed adjacent to the existing ones (which may be below / above ground) using trench less technology. The scope of work also involves making "dry" connections to the existing lines through appropriate bends / reducers etc. The work may have to be done in a planned sequential manner so that places of existing lines can be used for subsequent laying of alternative lines under this contract. The Contractor's method statement shall include complete particulars of such sequential working in his method statement. It shall be obligatory for the Contractors to ensure that the water supply is disrupted only for a bare minimum period which in any case shall not be over 24 hours through a single pipe.

The Engineer reserves right to amend the scope of work, to delete any slice/package, to replace any package or curtail scope of work without thus incurring any liability on the Engineer or the Employer.

Furthermore, the consideration that micro-tunneling method permitted as a suitable method of installing the pipelines and water mains in the Specification shall not relieve the Contractor in any way from his prima facie obligation and responsibility under the contract to successfully install the pipelines without causing interruptions to train and motor traffic and within the specified contract period and contract amount. The Contractor's rates in the Bill of Quantities shall be deemed to be for installing the pipelines successfully within the specified contract period regardless of the method considered in the specification as a suitable trench less method.

The annual rainfall in Mumbai is of the order of 2500 mm, most of which is precipitated within 4 months of monsoon from June to September, leaving a dry working period of 8 months from October to May. Mean daily temperature varies from about 22° C to 36° C, the hotter months generally being March, April, May and June. The relative humidity is generally between 48% and 87% highest being in the monsoon period from June to September. Some of the suburban areas are reclaimed land and the water table is generally high. BMC is responsible for providing public water supply facilities for the city and suburbs, covering an area of about 437 Sq km. The Corporation proposes to provide water mains by micro tunneling and pipe jacking method under this special Contract for realigning of existing water mains across nallah, flyover bridges, road junctions, drains, etc. so that the obstruction to the storm flow by these lines is eliminated. The proposed length of the pipelines to be installed through

microtunnelingunder the Contract is about 140m. approx. The diameters of casing pipe is 1200mm and carrier pipe is 900mm. The completed pipelines must be connected to the existing pipelines so as to ensure integrity of the system. It shall **be obligatory for the Contractors to carry out geotech investigations as considered necessary by them and satisfy themselves of the adequacy of their testing**. They shall ensure that the methods and equipment they proposed are in accordance with the geotechnical and other requirements pertaining to the sites. The Employer / Engineer shall not be responsible for any changes in method or equipment necessitated during execution of the work and it shall be contractors sole responsibility to ensure deployment of proper method and equipment for the work. The Tenderer shall, on his own accord collect information about likely geotechnical conditions at the sites. Any risks assumed by the applicant by solely depending on his current knowledge of the sites of the information currently available on the ground condition any physical obstructions and geological and geotechnical data on soils/rock of the area shall be entirely his own and shall be wholly and fully responsible for any consequential expenses arising as a result of the risk he assumed. He shall not resort to any compensation claim under the contract for differing ground condition that he may encounter as a result of assuming the risk. The extent and scope of the applicant's geological and geotechnical investigation along the final pipeline route would depend on the type and model of the systems that he proposes to use in the project. The applicant shall therefore carry out the necessary geological and geotechnical investigation of the sites and testing of the soils/rock (to determine compressive and tensile strength, abrasivity, mineral composition of the rock etc.) to be encountered along the pipeline route in the sites, as deemed necessary. The applicant shall ensure that the Trench less Technology system including where Micro tunneling is stipulated as mandatory shall successfully excavate in the wide ranging ground conditions, from water charged clayey strata with boulder's to rocky strata, likely to be encountered at the sites.

1.4 Operational Facility

The Contractor is advised that there may be other Contractors (i.e. from Railways or other authorities including BMC) working within the site area. The Contractor may therefore be given joint possession, in some sections of the sites, with the other Contractors for the purpose of carrying out his contractual obligation and he shall in no way interfere with, impede or otherwise prevent these other Contractors, from carrying out their contractual obligations. The Contractor shall allow in his prices, when biding, for affording reasonable facilities to the other Contractors and for any interference with his work from these other contract operations.

PART 2: TERMINOLOGY AND GENERAL DESCRIPTION

2.1 Definitions

For the purpose of this contract document, the technical terms pertaining to micro-tunneling works and their functional details are defined below. The definitions herein are meant only as guidelines. If other (or new) definitions or technical terms are used by the Contractor in his submittals, they shall be clearly defined by him.

2.2 Micro-tunneling

Micro-tunneling is a process of accurately excavating, non-man entry tunnels for installing underground pipelines, using laser guided remote controlled mini shields of diameters as small as 250mm. The micro-tunneling permits accurate monitoring and adjusting of the alignment and level (either manually or automatically) as the excavation proceeds.

2.3. Pipe jacking.
It is a process of lining a tunnel bore formed by a shield or other means by pushing especially designed jacking pipes (reinforced concrete or other pipes) into the tunnel bore, from a shaft (known as jacking shaft) to another shaft (known as receiving shaft).

2.4 Micro-tunneling and Pipe jacking:
It is an art of accurately installing smaller diameter pipelines (usually 250mm diameter and above), without digging up of ground surface, using a laser guided remote controlled mini shields for tunnel boring and pipe jacking technique for lining the bore with the product pipe. The process of installing a pipeline by micro-tunneling and pipe jacking system comprises five parts:-
(a) Micro tunnel boring machine (Shields)
(b) Automated spoil removal system
(c) Jacking system for pushing the jacking pipe and later on carrier pipe as needed
(d) Guidance system to guide the tunnel excavation
(e) Remote control system to operate the shield and other paraphernalia equipment.

2.4.1 Micro Tunnel Boring Machine (shield):
It is mechanized, steerable mini boring machine (or shield) equipped with suitable cutter head in front to excavate smaller diameter tunnels under controlled conditions in which the tunnel face and ground water pressure are continuously balanced as the shield excavates and moves forward. The operation and steering of the shield are remotely controlled with the aid of laser and/or CCTV system.

2.4.2 Automated spoil removal system
This system conveys the excavated spoil from the tunnel face to the ground surface for disposal. The spoil removal rate and the speed of the shield are fully or semi-automatically controlled in such a way to achieve minimal heave or settlement. There are three systems available for the conveyance of the spoil and they are slurry system, augur system, and vacuum system.

2.4.3 Jacking System
The jacking system comprise high thrust hydraulic jacks mounted in a jacking frame capable of exerting the required jacking force against a purpose built thrust wall to push the pipes and the shield forward through the ground. The jacking force is transferred evenly to the jacking pipe through a push ring connected to the pipe.

2.4.4 Guidance System.
The guidance system comprises a laser beam device or a theodolite with laser beam attachment. The device is installed in the jacking shaft and the beam is set to the desired level, gradient and alignment. Some machines have photo sensitive cells on the target panel located at the rear of the shield which converts the laser position into digital data. The data are then electronically transmitted to the operator's control panel where digital readout of the location can be made. Some modern shields have built-in capabilities to use the digital data and automatically make necessary steering adjustments to guide the machine to the true alignment and level The contractor shall submit complete details of the guidance system he proposes to use and shall incorporate appropriate check points and hold points in the **Quality Assurance Manual** that he shall implement in the contract. The laser torch or theodolite shall be firmly supported in the jacking pit so that it is independent of any movement that may take place during the

micro-tunneling operation.

2.4.5 Remote Control System:

All micro-tunneling systems rely on remote-control capability. The control system monitors and controls the steering of the shield, spoil removal system (slurry or augur or vacuum), jacking system and guidance system. The system operation varies from totally manual to fully automated. The remote control system is usually housed in portable control cabin. The control cabin shall be located near to the jacking pit so that the operator can visually monitor the activities in the pit. Where it is not possible to locate the control cabin near to the pit due to space limitations, a CCTV camera system shall be set up in the pit to allow the operator to monitor the activities in the pit. For the manual operating system, the operator's skill is very crucial for a successful completion of the project. The operator shall monitor all the information and continuously feed into the control panel as necessary. He shall be alert at all time and shall observe the crew's activities and other site activities, evaluate the information and make appropriate operational decisions. The information relayed back to the operator shall be audible, tactile and visual as The MTBM shall have facility to transmit sounds and vibrations from the excavation face to the operators to enable him to make appropriate operational decisions. He shall monitor and keep record of line and grade of the machine, cutter head torque, jacking thrust, RPM, steering pressures, slurry flow rate, pressures of slurry systems and rate of advancement. In fully automated system, the machine acquire and evaluate the information and select the operational steps for automatic steering of MTBM. The information collected shall be logged in a microprocessor to obtain a printout as necessary. The contractor shall incorporate check points and hold points for the guidance control system in the Quality Assurance System that he shall implement in the contract.

2.4.6 Supplementary systems.

The supplementary system required for micro-tunneling and pipe jacking operation shall include Muck disposal system, Pipe lubrication system, Grouting system, Guide rails, Entrance and Exit installations.

2.4.7 Jacking shaft (or Jacking Pit)

Jacking Shaft is an important temporary structure from where jacking operation is performed. The shaft is usually rectangular or circular in shape and built using liner plates, sheet piles or timber shoring. The size of the shaft shall be such that it is capable of accommodating the jacking equipment (and also the shield), jacking pipe and other paraphernalia or enable construction of manhole or chamber as needed. It is usually constructed at locations where permanent manholes are to be built. The requirement for jacking shaft shall take full cognizance of the available working space and intended equipment.

2.4.8 Receiving shaft (Receiving pit)

A purpose built temporary structure to receive and remove the tunneling shield after its completion of a tunnel drive. The shaft is also rectangular or circular in shape and smaller than the jacking shaft. The size shall be sufficient enough to accommodate the tunneling shield when it emerges into shaft after completion of a tunnel drive or construction of manhole or chamber as needed.

2.4.9 Footprint:

The footprint of a micro tunnel drive shall be taken as the net area occupied by the jacking or receiving shafts. The size of the footprint depends on many factors including the micro-tunneling system and the length of jacking pipe used. The footprint requirement shall be an important factor, especially in congested and narrow roads when selecting the micro-tunneling system for a project. The Contractor shall

take into consideration of the space constraints and restrictions along the pipeline route for location of shafts and he shall ensure that the micro-tunneling system selected for use in such sites shall require absolutely minimum space for the footprint.

2.4.10 Thrust wall

Thrust wall is a temporary concrete or steel structure built within the jacking shaft to transfer the jacking force to the ground during jacking operation. The jacking shafts may often have more than a single thrust wall and each thrust wall shall be perpendicular and square to the pipeline to be jacked. The thrust walls shall be in good contact with the soils behind so that wall can transmit the jacking force effectively to the ground without affecting the shoring system. All the affected thrust wall shall be demolished fully or partly after completion of jacking operation involving in that wall.

2.4.11 Entrance Ring:

A steel flange fitted with a rubber seal (a 10mm to 20mm thick circular rubber gasket whose outside diameter is same as that of the steel flange and the inside diameter is smaller than that of the jacking pipe) installed perpendicular to the pipeline at the entrance. The purpose of the rubber seal is to prevent the slurry or ground water from entering into the shaft through the pipe entrance.

2.4.12 Exit Ring

This is similar to the entrance ring except that the internal diameter of the rubber seal is much smaller than that of the jacking pipe and is installed to prevent the slurry or ground water from escaping the tunneling machine when it emerges at the receiving shaft.

2.4.13 Guide Rails (or Jacking Table or Frame):

To facilitate placing of the micro-tunneling machine and pipes in the jacking shaft, a set of guide rails are installed in position on the base of the shaft. The guide rail assembly (also known as jacking table/ frame) shall be carefully set up in the shaft to correct alignment and gradient so that the pipe when placed on it stays in line with and square to the pipeline alignment. The guide rail assembly shall be independent of the thrust wall so that it is not disturbed due to jacking force exerted onto the thrust wall.

2.4.14 Thrust Pressure Plate

The thrust pressure plate is usually a 50mm or 100mm thick steel plate installed between the jacks assembly and the thrust wall. The pressure plate enables the concentrated jacking load from the jacks to be transmitted evenly to the thrust wall.

2.4.15 Intermediate Jacking Station.

For longer distance jacking, intermediate jacking stations, comprising a telescopic type jacking pipe assembly (usually made of steel), are used. A set of inter jacks and push ring are installed around the inner side of the female pipe of the telescopic pipe assembly. The intermediate jacking pipe assembly shall be installed at appropriate point and jacked-in along with the other jacking pipes.

2.4.16 Cutter head

It is usually a disc shaped wheel mounted on the face of the micro tunneling machine (shield) and is driven by hydraulic or electrical motor, located within the machine. The excavation capabilities of a micro-tunneling machine depends very much on the type of cutter head used, its speed of rotation and average and peak torque etc. Different types of cutter head configuration are used in micro-tunneling machines to suit the type and nature of the ground through which tunneling is to be carried out. For example in soft ground tunneling the cutter head shall have bits arranged in such a way to cleave and

guide the soil into a chamber behind the cutter head through the openings provided in the cutter wheel. In the case of rock or hard ground tunneling the cutter head shall be equipped with suitable bits, roller bits or disc cutters for effective transfer of cutting energy to rock. The cutter head shall be configured appropriately considering geotechnical parameters such as compressive strength, tensile strength, elasticity, abrasivity etc, about the material to be excavated. The tunneling machine shall be equipped with a crushing chamber behind the cutter head with powerful crusher to crush the excavated rocks into smaller pieces. Moreover, the machine shall be capable of exerting a large thrust force/torque on to the tunnel face to facilitate excavation of rock. The speed of rotation, torque, bit arrangement (and its structural and mechanical characteristic to withstand rock excavation for longer drive) of the cutter head and the thrust force the tunneling machine is capable of exerting on to the rock face are important features to consider when selecting machines for tunneling in rock.

2.4.17 Jacking Ring

Jacking ring or thrust plate is a purpose made structural fitting which shall be installed between the jacking assembly and the jacking pipe to transfer the point loads from the individual jacks into evenly distributed jacking force to the pipes being jacked. The ring shall be fabricated and machined, if necessary, so that it fits exactly onto end of the jacking pipe.

PART 3: PERFORMANCE REQUIREMENTS AND SITE RESTRICTIONS.

3.1. Level and Alignment Accuracy

The pipes shall be installed into place, true to line and level. The maximum tolerance allowable in the displacement of the centre line of the laid pipe from the design centre line is 50 mm in the horizontal plane and 25mm in the vertical plane but there shall be no backfall at any point. Special precaution shall be taken to ensure correct grade and alignment of the carrier pipes when grouting after installation. Suitable chairs or supports or anchors shall be provided in the sleeve to prevent misalignment or movement during grouting. There shall be provision to prevent the relative movement between pipes at the joints by the use of steel gaiters or other approved methods during jacking operation. A packing piece of compressible material shall be provided at each joint and shall be securely held before the pipes are lowered into the thrust pit. Details of proposals shall be submitted to the Engineer for approval.

3.2 Limits on ground settlement and upheaval

The trench less technology method adopted by the Contractor shall be such that the initial surface settlement measured directly above the front face of the shield or boring equipment during the tunneling/ boring operations does not exceed 15mm and the maximum surface settlement after the tail voids are grouted shall not exceed 25mm. The affected ground and the structures shall be subsequently reinstated to their original condition at Contractor's risk and cost. However, for the sections of pipeline crossing under nallah, roads and railways the Contractor shall be required to incorporate in his tunneling method measures to arrest the expected settlements so as to safeguard the integrity of the road surfaces and railway lines at all times or collapse of nallah bed. The Contractor shall ensure that the traffic flow along the roads and railways are not affected in any way by his work.

3.3 Limitation on Footprint:

The contractor shall be deemed to have visited the sites and carefully planned and located the shafts at convenient points along the roads so as to minimize the road area to be occupied by the footprint. The contractor shall be deemed to have allowed for such site constraints and measures required, including

working in the night and construction of decking over the shafts, provision of access roads for construction plant and machinery, to allow the traffic to flow, in his rates. He shall take the site constraints and restrictions into consideration when selecting the trench less technology system.

3.4 Proper scheduling of operations:

It must be noted that the objective of the works to

(a) Provide alternative pipeline at a higher depth below nalla bed (Depth governed by technical requirements but in no case the crown shall be less than 1.5 m. below nallah bed or as per requirements of S.W.D. departments of B.M.C. whichever is higher.

(b) Provide alternative pipeline at higher depth below crossing flyover bridge pillers or below railway lines as directed by the Engineer.

(c) Crossing road junction, Railway line, Creek and race course etc. as directed by the Engineer.

(d) Provide dry or live connection as and when directed by the Engineer /User department.

(e) Cause minimum disruption in water supply at the downstream or to the flow of water through the nallah.

At some locations multiple pipelines running parallel to each other are required to be deepened and the space of laying additional line is extremely limited. For this reason the work will have to be scheduled in proper sequential manner. In general, it may be achieved with following sequence.

1. Take jacking and receiving pit adjacent to one of the (outermost) pipes as space and the technical requirements permit,
2. Complete micro-tunneling for the line.
3. Install required bends/valves specials etc.
4. Carry out connection to existing line. The Contractor shall ensure proper co-ordination with the Engineer's staff, various sections of H.E.'s department like Planning & Construction, A.E.(O.C.), Dy.H.E.(Maint.), etc. for timely connection and transfer of flow to new line. the Contractor shall be responsible for proper time scheduling for this purpose.
5. After successfully transferring the connection and commissioning the line, old portion of line between the diversion points shall be carefully removed ensuring minimum damage to the old pipes and transported to a place within Mumbai Municipal limits as directed by the Engineer with proper acknowledgment.
6. After removal of old pipe the jacking / receiving shafts shall be extended further at the place made available by removed pipe and next pipe replaced following sequences like 3 to 5 above.
7. The sequence shall be repeated till all lines are replaced with alternative lines at required depths below nallah bed.
8. Failure to ensure proper time scheduling by the contractors may lead to delays or total inability in taking up the work on further pipe lines. Such delay or inability shall be entirely attributable to the Contractors.

3.5 Providing temporary access to the jacking or receiving pits.

Where it is seen that the locations of pits do not have direct access from roads for taking construction plant equipment, the Contractor may have to provide temporary access by providing R.C.C. pipes in the nallah ensuring adequate waterway through nallah or provide pontoons etc. as also breaking compound wall etc. Any temporary arrangement shall be subsequently removed and the site conditions restored to their original state upon completion of the work. All such activities shall be provided by the contractor at his risk & cost, without claiming any extra.

Part 4 - CONTRACTOR'S Submittals

4.1 General information on submittals.

To ensure compliance with the requirements specified in the Contract, the contractor shall make a number of submittals as described in the following clauses to the Engineer for approval by the specified time. The contractor shall ensure that the submittals prepared are of good professional standard, comply with all the requirements specified in the contract and complete with all details and information to enable the Engineer to evaluate and approve the submission. It shall be clearly understood by the contractor that he shall not commence any work without the approval of the submittals by the Engineer. Submittals by the contractor shall, interalia, include Contractor's method of construction, Micro-tunneling equipment description and literature, Jacking system and maximum jacking loads, Pipe designs and shop drawings and calculation demonstrating the ability to sustain maximum jacking loads, Intermediate jacking stations details, Lubrication system, Bentonite injection system details, Ground water control details, Entry and exit details, Jacking and receiving shaft design details, Thrust block details, Muck removal and disposal, Horizontal Directional Drilling Equipment, buried services details, detection equipment or any other trench less technology system equipment, etc.

All submittals shall be submitted by the Contractor in accordance with schedule given in 4.17.

4.2 Submittal on Contractor's method of construction

The submittal shall contain a detailed explanation of various steps involved in the construction process. They shall include details of the equipment, specific manufacturer's instructions and guidelines pertaining to the project, a methodology statement outlining the operation of the equipment and, details of materials including pipe materials, rubber ring, compressible packers and jointing of pipes. The submittal shall also include construction details of other permanent and temporary structures such as jacking and receiving shafts, cast in-situ and precast manholes, or brick masonry manholes, thrust walls, and entry and exit of the shaft. The details of other equipment such as intermediate jacking stations, spoil removal system including slurry and feed pumps, control systems, slurry tanks and associated machinery, jacking frames, spacers, thrust ring etc. shall also be included in the submittal. The submittal must accompany the bid failing which the bids shall be considered 'non-responsive' and rejected outright.

4.3 Submittal on geotechnical profile and geotechnical reports along the pipeline route.

The Contractor shall establish the subsurface ground conditions and their range of variability along the pipeline before embarking on the works. He shall clearly identify the types of soil or rock that is likely to be encountered during boring or tunneling along the entire pipeline alignment. If found necessary he shall carryout simple probing techniques (Geophysical soundings or Seismic refraction method) at closer interval and determine accurately the types of ground to be expected during boring/ tunneling. He shall prepare a comprehensive geotechnical profile along the pipeline route with detailed descriptions of the types of soil or rock to be expected during boring/ tunneling. The Contractor shall endeavor to carry out essential geotechnical investigations and tests (Field as well as laboratory) immediately after award of the work for enabling him to select appropriate equipment/ methods. The Contractor shall be solely responsible for geotechnical investigations and the inference drawn from such investigations as well as the adequacy of the equipment and method adopted by him. However, other progress of works like construction of shafts etc. may be continued simultaneously.

4.4 Submittal on jacking pipe design and carrier pipes.

The contractor's attention is drawn to the requirement pertaining to the design, manufacture and handling of the jacking pipes in clause 5.3. The contractor shall with the approval of the Engineer, engage a

reputable pipe manufacturer to design and manufacture the jacking pipes. In which case, the submittal shall include the manufacturer's name, address, contact telephone and facsimile numbers and the manufacturer's quality assurance /control and testing plan for the jacking pipe. The manufacturer's representative's name shall be also included in the submittal. A dimensioned drawing of the jacking pipe with design calculations from the manufacturer shall be also submitted to the Engineer for approval. In case the Contractor intends to manufacture the pipes in his own facility set up for this purpose, he shall submit all details of equipment, design and process to the Engineer for approval. The pipes shall conform to latest versions of respective BIS standards and shall be fabricated with approved materials in case of MS pipes or shall be procured from a manufacturer having facility with BIS certification. The Contractors shall also furnish copies of the standards for carrier and sleeve pipes along with his submittal. The submittal shall include particulars of the anti-corrosive protection to the pipe lines including the name of the establishment carrying out such job and along with a letter from the plant owner that he guarantees delivery of the quoted pipes in accordance with the schedule of work as planned by the contractors and as directed by the Engineer / Employer.

4.5 Submittal on micro-tunneling system.

The tenderer / contractor shall furnish name of the micro-tunneling, model, manufacturer's technical literature for the equipment and all other data along with their bid. Any amendments deemed necessary by the Contractors shall be submitted along with the geotechnical profile within 3 days of submission of geotechnical profile to BMC. The submittal shall include information to ensure that the micro-tunneling equipment proposed for the project meet with the general requirements specified in these specifications and also the anticipated geological conditions as assessed by the contractors. The submittal shall also include a certification from the manufacturer of the equipment about adequacy in the anticipated geotechnical conditions as also design calculations showing maximum anticipated jacking or pullback force and torque needed for tunneling/ boring.

4.6 Submittal on site layout.

Contractor's attention is drawn to various clauses in the document with regard to the site constraints and space availability in all the sites. The contractor shall carefully examine the site and prepare site layout plans showing the arrangement of various ancillary equipment required for works, such as approaches for equipment, spoil removal equipment and slurry tanks, bentonite systems/ mud recycling system, generators, control cabin, tracking facilities, crane, storage of pipes etc. for each drive and submit them progressively to Engineer for approval.

4.7 Submittal on existing pipe levels, location of shafts and new pipeline alignment.

The contractor shall survey and verify the as-built invert levels of the upstream and downstream pipelines and manholes shown on the contract drawings for all the sites. The contractor shall confirm or insert the correct as-built levels in the contract drawings and submit them to the Engineer for necessary amendments and re issue of the contract drawings for construction. Under no circumstances the contractor shall commence works without verifying the as - built levels and obtaining the approval of the Engineer. .The Contractor will be required to set out and plan the actual route for the pipe laying well in advance of actual excavations. Trial holes/ probing and other preliminary surveys must be carried out and the resulting information carefully plotted. A copy of all preliminary surveys and the results of exploratory excavations must be supplied to the Engineer. For convenience of construction, if the Contractor prefers changes to the pipeline alignment or the location of manholes shown on the contract drawings, he shall

incorporate such changes in his submittals to the Engineer for approval. The Engineer would evaluate and approve if the proposed changes are found to be economically and technically, and functionally acceptable. It shall be clearly understood by the Contractor that any construction risks and additional costs arising as a result of Contractor's changes made to the original pipeline design shall be entirely borne by the Contractor.

4.8 Submittal on jacking and receiving shaft design

The Contractor shall submit the design and construction details of the jacking and receiving shaft and their proposed locations along the pipeline route to the Engineer for approval. The Contractor's design shall ensure that the shaft dimensions are absolute minimum required and method of construction shall be such that the shafts are constructed without causing unacceptable obstruction to the existing traffic flow in the vicinity of the construction. The minimum size of the shaft shall, however, permit construction of appropriate manhole / valve chambers as per the requirements. The Contractors shall also submit design and construction details of decking, if required, for the shaft. The Contractor shall be deemed to have allowed for in his Bid for such decking work necessary to maintain the traffic flow. The submittal shall also include details on shoring system, entry and exit arrangement, thrust wall layout and design details, general layout of guide rail and jacking table arrangement etc.

4.9 Submittals for obtaining approval from authorities

The contractor shall submit separate schedule for obtaining approval of various authorities and obtain specific permission or approval through the engineer. The Contractor shall be responsible for obtaining permissions from traffic police, PWD, Forest and Railway authorities with due regard to the method of work and detailed designs involved. The contractor shall be responsible for submission of the detailed designs and clarification on time to the concerned authorities. The Employer shall arrange to pay for the way leave charges or supervision charges only as demanded by railway or PWD authorities.

4.10 Submittal on buried services and obstructions

The contractors shall investigate and determine the actual location of the buried or over the ground services and physical obstructions, if any, along the pipeline route and at his chosen locations of the jacking and receiving shafts, and submit service location drawings to the authorities responsible for electricity, telecom, water, pipeline, gas etc. and obtain their approval or permission to excavate in their vicinity. The Contractor shall not interfere with the operation of any existing or proposed service. He shall carefully plan the pipeline route and the locations of the shafts and manholes and shall identify the services that require diversion well ahead so as to give ample time to the authorities to divert the services or give approval to carry out the diversion by others. Where applicable, the Engineer would assist the contractors in getting the approval as expeditiously as possible from authorities. If in the opinion of the Engineer any services that are within the manhole proper or affecting the alignment and require permanent diversion, they shall be diverted at the expenses of the Corporation. Expenses for all other diversions and temporary protection of services shall be borne by the Contractor. Any consequential delays or expenditure arising from Contractors' carelessness or lack of foresight on this matter shall be entirely borne by the Contractor. The Contractor shall fully co-operate with the Engineer and the authorities and shall have no claim for delay due to such relocation of services. The Contractor shall allow for sufficient time for getting the permissions from the authorities.

4.11 Submittal on monitoring of ground settlement and upheaval

The contractor shall monitor ground movement daily at the start of jacking operation and end of the jacking operation on that day and submit in an approved format the settlement or upheaval caused by the micro-tunneling and pipe jacking works to the Engineer.

4.12 Submittal on safety

The Contractor shall be solely responsible for safety of the workmen, Engineer's staff and third party. The contractor shall implement a comprehensive safety plan for his work people and Engineer's/ Employer's staff or Third party. He shall comply with all relevant acts governing safety on construction site. He shall submit to the Engineer the details of the arrangements he made with the fire brigade, local health authorities and the availability of medical staff, first aid equipment ambulance, sick bay etc. He shall give the names and contact telephone numbers (24 hours) of the occupational health and safety personnel. Beside he shall submit a list of safety equipment that he would provide to all the workers on site. The Contractor shall appoint a Safety Officer or Safety Engineer at all times who shall be the responsible person for all safety related matters pertaining to the contract. Name of such person shall be communicated along with the submittals on safety. The contractor shall comply with the guidelines issued by any competent authority regarding safety at work site especially safety of persons working inside any pipeline- new or functioning.

4.13 Submittal on quality assurance/control plan

The Contractor shall implement a Quality Assurance Program approved by the Engineer for the manufacture of jacking pipe and for actual installation of the pipes by micro-tunneling and pipe jacking method on site.. The Quality Assurance Programme shall be maintained in accordance with the provision of the manual. No works shall commence until the Quality Assurance Manual has been approved by the Engineer. The Contractor's Quality Assurance System shall incorporate but not be limited to the following:

(i) The Quality Assurance and Quality Control procedures covering all materials, design, manufacture, supply and installation carried out by the Contractor and any of his sub-contractors.

(ii) Such tests necessary to demonstrate that materials comply with the requirements of this specification and the requirements of the relevant Standards and Codes.

1. Contemporary records to be maintained pertaining to progress of the work.

4.14 Submittal on Contractor's personnel

The Contractor shall appoint a dedicated Project Manager along with at least two dedicated site engineers experienced in micro-tunneling work for this contract. The contractor shall note that the skill of MTBM operator and their assistants is crucial for successful execution of work. The contractor shall submit complete information for the operators proposed to be employed for the work. The contractor shall submit a list of his key site staff including their CV to the Engineer along with the bid. No change in the personnel shall be permitted subsequently without written permission of the Engineer. He shall submit the diagram showing the communication link within the site to Contractor's Head Quarters along with designation and telephone numbers of key staff for the Engineer's record. The Engineer reserves his right to reject any person who he thinks not suitable for the contract and the Contractor shall be obliged to replace such person immediately.

4.15 Submittal on remedial measures to be adopted by the Contractor.

The Contractor shall take each and every precaution to ensure that the tunneling or drilling equipment will successfully excavate along the chosen pipeline alignment before he commences the operation. Once

the tunneling/ drilling is commenced in a drive, the Contractor will be held fully and wholly responsible for the successful completion of the tunnel excavation and retrieval of the shield from the receiving shaft or for completion of pilot bore and hole enlargement upon back-reaming. In the event of inability to complete the drive, due to break down or any other reasons, the Contractor shall be fully responsible to recover the equipment safely from the ground and restore the incomplete work to the original condition at his risk and cost by a method approved by the Engineer and the concerned authorities within time stipulated by the Engineer or the concerned authority. It shall be clearly understood by the Contractor that the occurrence of such an event is preventable as such an occurrence is generally due to Contractor's negligence in the "preventive maintenance" of the equipment or driving of it to true level and gradient or his failure to determine accurately the expected ground conditions before commencement of the excavation. The Contractor shall in his submittal clearly state the measures that he would implement to retrieve the shield without causing interruptions to railway or road traffic etc and without causing any damage to the property belonging to the MbPT, PWD or Railways/ BMC etc. The cost for such retrieval measures or any consequential expenditure or delays arising from thereof shall be entirely borne by the Contractor. Any failure to remedial measures shall be entirely at the risk and cost of the Contractor. Any abandoned hole or tunnel must be grouted completely at the Contractor's cost so as to prevent subsequent settlement.

4.16 Effect of Approval and Acceptance of Proposals

Approval or acceptance by the Engineer of any proposal for executing the Works, including drawings, specifications or resources employed under the Contract shall not relieve the Contractor of his responsibility for any errors thereon and shall not be regarded as an assumption of risk or liability by the Corporation. The Contractor shall have no claim under the Contract on account of the failure or partial failure or inefficiency of any plan, method of work or equipment approved or accepted by the Engineer. Such approval or acceptance shall be considered to mean only that the Engineer had no objection to these proposals. Notwithstanding any approval or acceptance by the Engineer, the Contractor shall remain fully responsible for completing the Works correct in every detail.

4.17 Schedule of submittals

Sr. No.	Clause Number	Description	Schedule of submission
1	4.2	Contractor's method of construction.	Along with the Technical bid. Packet 'B'
2.	4.3	Geotechnical profile along pipeline route.	Within 15 days of date of commencement letter for all work packages.
3.	4.4	Jacking pipe design	Along with the Technical bid. Packet 'B'
4.	4.5	Micro tunneling system	Original submission along with the Technical bid. Packet 'B' and any changes necessitated by the geo-tech investigation shall be submitted within 3 days of submission of geo-tech profile.
5.	4.6	Site layout	Within 14 days of commencement dates.
6.	4.7	Existing pipeline levels locations at shafts and new pipeline alignment.	Within 14 days of commencement dates.

7.	4.8	Jacking & Receiving shaft design.	Along with the Technical bid. Packet 'B' Any changes necessitated by the geo-tech investigation shall be submitted within 3 days of submission of geo-tech profile.
8.	4.9	Approval from authorities.	Within 14 days of commencement date
9.	4.10	Burried Services & obstructions.	Within 15 days of commencement letter for all packages.
10.	4.11	Monitoring of Ground settlement & up level.	Along with the Technical bid. Packet 'B'
11.	4.12	Safety.	Along with the Technical bid. Packet 'B'.
12.	4.13	Quality assurance/ Central plan.	Along with the Technical bid. Packet 'B'
13.	4.14	Contractors Personnel	Along with the Technical bid. Packet 'B'
14.	4.15	Remedial Measures.	Along with the Technical bid. Packet 'B'

Part 5 Products

5.1 Standards and Codes

Except as otherwise stipulated in this Specification and in the BMC's Standard Specifications, all materials and workmanship shall comply in all respects with requirements of such standard and specifications, codes and other standards issued by the Bureau of Indian Standards (BIS) and current at the date of bid as may be applicable to any part of the Works of this Contract. In the event there being no relevant Indian Standard Specification, other relevant standard, specification, current at the date of bidding such as the British Standards Institution, American Society for Testing Materials (ASTM), German Standards (DIN), Japanese Standard for Water and Sewerage (JSWAS), Standard Association of Australia (AS), or Singapore Standards (SS) and or of the or any other equivalent standard approved by the Engineer shall apply. If after the date of invitation to Bid there is an amendment to a standard specification relevant to the Contract, the Engineer will direct whether the amendment is to apply. In the event of there being any conflict between this Specification, the Drawings and any Standard Specification forming part of this Contract, this Specification shall take precedence over the drawing, BMC's Standard Specification, codes and other standards in that order of precedence.

5.2 Selection of Micro-tunneling Equipment

The contractors shall be responsible for the selection of a suitable micro tunnel boring machine capable of excavating the materials including rocks and mixed ground that may be encountered at the sites. The contractor shall ensure that geological and geotechnical information he obtains or possess for the sites is adequate to accurately determine the types of soil and rock that may be encountered during execution of the project. The contractor is deemed to have carried out sufficient geological and geotechnical investigation of the sites and testing of the soil and rock (to determine compressive strength, tensile strength, abrasivity, cuttability, mineral makeup of the rock etc. as may be necessary to determine the ability to successfully tunnel through the ground) as necessary at his own cost before the selection of the micro-tunneling system. The contractor shall also ensure that the micro-tunneling system he selects for the project shall successfully excavate in the wide ranging ground conditions from clayey and sandy strata with boulders and loose rocks to rocky strata that may be encountered at the sites. Contractors shall pay

particular attention, when selecting the tunneling equipment for the project, to ground water level fluctuation and the wide ranging subsurface soil strata from clays, sands, gravels, soft soils with boulders and loose rocks to basaltic rock that may be present at the sites. The tunneling equipment selected for the project shall have appropriate cutter head equipped with suitable cutter bits to excavate soils and rock below the water table. The tunneling equipment shall be capable of balancing the ground water pressure supporting the excavated tunnel face at all times. The equipment shall be articulated to enable remotely controlled steering, in both the horizontal and vertical directions. It shall be capable of preventing rotation and rolling movement of shield's body during the drive. The tunneling equipment shall, interalia, have the following features.

(a) Able to excavate and crush rock formations, loose rocks, boulders of unconfined compressive strength and cuttability in excess of 300 Mpa with no requirement for replacing the cutter head or bits and other components when geological and geotechnical conditions change during a drive. The compressive strength mentioned above shall not be construed as the maximum anticipated and the contractor shall be solely responsible for selection of appropriate equipment.

(b) Able to cut through rock having high tensile strength, elasticity, hardness and abrasivity.

(c) Powerful cutter head, capable of exerting large and/or surging torque to break up rocks and boulders.

(d) Powerful crushing force, preferably with eccentric radial motion of the crushing device, capable of crushing gravel, boulders and rock.

(e) Equipped with suitable steering and guidance system that ensures easy steering control

(f) Equipped with a suitable lubricating system arrangement

(g) Ability to provide for an Intermediate Jacking Station, if needed

(h) Instrumentation to measure deviation from the designed level and grade, rolling and pitching of the equipment, cutter torque and its percentage to the maximum torque, rpm, jacking speed, tunnel face pressure etc. preferably with a computerized data logging and printing facility. The micro-tunneling equipment proposed for the project shall meet the above mentioned criteria or otherwise it will not be permitted to use in the project. The Contractor shall arrange for visit by three representatives of the Engineer/ Employer to the manufacturer's facility for inspection of the equipment before finalization of the order for the equipment at Contractor's cost which shall include all expenses including Visa, Airfare, stay in hotel for duration as needed, local transportation and full boarding.

5.3 Jacking Pipe

All jacking pipes for water mains shall be of Mild Steel with properly designed thickness, ends and joints.

A. Jacking pipes:

The pipes shall be manufactured from best quality M.S. Plates. The thickness of M.S. Plates shall be in consonance with the design and performance requirements and in no case less than 16mm for casing pipe . The tenderers shall submit complete design details of M.S. pipes giving particulars of load carrying capacity – horizontal (jacking loads installation loads) and vertical (Dead load and imposed loads / service loads). The design must account for the anticipated jacking load and precaution against buckling of the plates during jacking operations. The welded joints must be thoroughly checked and ensured that the same are capable of providing smooth jacking operations up to the anticipated jacking force with proper factor of safety. The tenderer shall supply complete particulars of joints, connection with jacking frame etc. for Engineer's consideration. The steel pipes shall be manufactured in a manufacturing establishment approved by the Engineer and contractor shall supply the name of the steel pipe manufacturer along with the bid. The steel pipes shall conform to IS 3589.

B. Carrier Pipes (M.S.):

The pipes shall be manufactured from best quality M.S. Plates. The thickness of M.S. Plates shall be in consonance with the design and performance requirements and in no case less than 12 mm for carrier pipe. The tenderers shall submit complete design details of M.S. pipes giving particulars of load carrying capacity – horizontal (jacking loads installation loads) and vertical (Dead load and imposed loads / service loads). The design must account for the anticipated jacking load and precaution against buckling of the plates during jacking operations. The welded joints must be thoroughly checked and ensured that the same are capable of providing smooth jacking operations up to the anticipated jacking force with proper factor of safety. The tenderer shall supply complete particulars of joints, connection with jacking frame etc. for Engineer's consideration. The steel pipes shall be manufactured in a manufacturing establishment approved by the Engineer and contractor shall supply the name of the steel pipe manufacturer along with the bid. The steel pipes shall conform to IS 3589. The pipes shall be internally lined with cement mortar lining.

PART 6: EXECUTION

6.1 Information for the execution of works

Where specified in the Drawings and Bills of Quantities, sections of the pipeline shall be laid by micro-tunneling and pipe jacking or other method approved by the Engineer. The word tunneling in this Contract implies micro-tunneling and pipe jacking The Contractor shall be responsible for inspecting the sites and familiarizing himself with the conditions under which the work will be performed and with all necessary details including geotechnical investigations and buried services location as to the orderly and successful execution of the work. The omission of any details shall not relieve the Contractor of full responsibility for the satisfactory installation of the work in its entirety. No monetary or other claims made by the Contractor on the grounds of want of knowledge will be entertained by the Corporation. Plans and details of the equipment, materials and the method of construction to perform and complete the work shall be submitted by the Contractor and must be approved by the Corporation during the Biding stage and also by the Engineer during the construction stage before commencing these operations. Approval by the Engineer shall not relieve the Contractor of his sole responsibility for the efficiency, reliability, and soundness of the method employed in completing the work in a satisfactory manner. The contractor is advised that it shall be his sole responsibility to ascertain for himself the extent of work that is required to be done in site and to generally obtain his own information on all matters affecting the execution of the whole of the works involved in this contract to the entire satisfaction of the Engineer. No claim of extras in consequence of any alleged ignorance in any aspect will be entertained by the Engineer. It must be clearly and definitely understood that the contractor shall be held solely responsible for making all necessary arrangements and coordinating with all relevant Authorities, Specialists, Sub Contractors, etc. to ensure satisfactory and timely completion of this contract.

6.2 Execution of works-General

The Contractor shall be fully responsible for the design and construction of the jacking/ launching and receiving pits, thrust wall, installation of jacking equipment, installation of any other equipment, sheeting/ shoring, bracing, etc., and for the efficient execution of the work. Full details of his proposals, including plant, Micro tunnel Boring Machine (MTM), ancillary equipment, operating procedures, jacking pit and intermediate jacking stations, rock cutting tools, repair of leakage etc. shall be submitted to the Engineer. And shall be fully satisfactory to him before construction. However, review of the plans shall not relieve the Contractor from his responsibility to provide a safe and satisfactory arrangement. The Contractor shall be required to monitor closely the progress of the tunneling/ jacking and drilling operation. Daily manual

logs or site records of thrusting pressures, torque, bentonite injection rate and the line and level measurements shall be properly maintained in addition to any computerized data logging and shall be available to the Engineer's representative at all times. Such records shall be duly signed by the Contractor's site in-charge. If the Contractor fails to maintain and produce such details before the Engineer's representative on site, the Engineer's representative may order suitable steps including suspension of the work without prejudice to any other rights of the Engineer. The Contractor shall be solely responsible for such actions ordered by the Engineer's representative. It is the responsibility of the Contractor to ensure that the completed tunnels are watertight. If leakage occurs before completion or during the maintenance period, the Contractor shall carry out any remedial work that may be necessary to make the Works watertight all at his own expense.

6.3 Location and verification of buried services.

The Contractor will be held solely responsible for making his own investigations of any buried services in the vicinity of the Works and to protect them from getting damaged due to his work. Contractor shall be deemed to have allowed for any extra costs in his rates for detecting all obstructions and buried services including appropriate measures to protect the services and temporarily divert the same in consultation with the concerned agency with its prior approval regardless of whether they are indicated on the drawings or not. It shall be the Contractor's responsibility to obtain any permission from such agencies. The Engineer/ Employer may issue necessary recommendation letters if required. The contractor shall engage at his own cost a competent service detecting technician or agency who shall have state-of -the - art detecting equipment to locate and verify all the buried services such as pipeline, water, telecom, electricity, gas and all other services, and abandoned services and structures well ahead of commencing the works. The detector shall be able to receive narrow signal responses from buried services in order to pinpoint the position and direction of the services. It shall also be able to pick up the position and direction of different services in congested area and detect the buried services regardless of almost any environmental interference. Combination of Ground Probing Radar (GPR) and Electromagnetic Location (EML) testing is considered effective for locating the underground utilities and buried objects. The lines tested using GPR and anomalies located using EML shall be topographically surveyed using a Total Station / Theodolite at the same time as the geophysical testing is carried out. The information so collected shall be submitted to the Engineer after getting it confirmed from the respective agency in accordance with clause 4.10. It shall be clearly understood by the Contractor that no work shall be carried out without locating all the buried services and he will be held solely responsible for any consequential expenses and delays if he ignores this specific requirement or fails to locate any services along the route. The Contractor shall take every precaution that in the opinion of the Engineer and as advised by the owner of the utility is necessary for the protection from injury of all existing and proposed water, drain, pipeline and other pipes, electric and telephone conduits, and other existing works, roads and services wherever encountered or which are adjacent to the works, and to maintain the same until in the opinion of the Engineer the general progress of the work renders further protection unnecessary. All damage occasioned by the Contractor to these works and services shall be repaired at once at the Contractor's risk and cost, as directed by and to the satisfaction of the Engineer.

6.4 Site investigation

The Contractor's site investigation for micro-tunneling or any other acceptable trenchless technology work shall be critical and the most important engineering work to be carried out before commencement of work on site. The contractor shall clearly understand the importance of establishing the subsurface ground conditions and their range of variability along the pipeline route well before embarking on the actual

works. There should not be any room for unforeseen ground conditions and is absolutely necessary for the Contractor to know what is to be encountered during the tunneling operation. The contractor shall be deemed to have accurately established the types of soil and rock strata along the tunnel bore and their range to enable him to select the equipment / machines and to set-up and operate correctly. All such surveys & investigations to be carried out by the Contractor at his own cost and No payment will be made for this at any stage of the project.

6.5 Subsurface investigation

The subsurface investigation shall includes study of all existing geological and geotechnical information for the area including the information pertaining to the project and the location maps of all the services in the area from the utility companies/authorities for initial planning. Data on abandoned and existing obstruction, foundation, piles and the structures in the vicinity of the alignment shall be also collected. Field survey using utility services locator and trial trenches may also be carried out to verify the location of the services and obstructions Mapping out of the subsurface soils/rock profile along the pipeline alignment and locating underground utilities and buried objects by geophysical testing such as the combination of Ground Probing Radar (GPR) and Electromagnetic Location (EML) testing is considered useful in determining the nature of ground to be encountered. The Contractor is deemed to be aware of similar state of the art ground probing/mapping technology currently available on the market and to have made provision for its use in the project as part of his subsurface investigation works. The contractor shall be deemed to have in possession of all the information and data required to accurately evaluate the subsurface conditions before commencement of any works. All such surveys & investigations to be carried out by the Contractor at his own cost and No payment will be made for this at any stage of the project.

6.6 Geological and geotechnical evaluation.

The contractor is deemed to have obtained, studied and evaluated all the geological and geotechnical data for the sites including any data if available with the corporation for the sites and made his own judgment and conclusion on the types of soils and rock to be excavated along the pipeline route. The Contractor must supplement this information possessed by him with appropriate geotechnical investigation prior to selection of appropriate tunneling/ drilling machinery. The applicant shall inform himself thoroughly and make his own deductions as to the nature of the materials to be excavated, the difficulties of making and maintaining the required excavations and of doing other work affected by the geology of the Site and shall accept full responsibility thereof. All such surveys & investigations to be carried out by the Contractor at his own cost and No payment will be made for this at any stage of the project.

6.7 Bore-logs and ground probing

Sufficient numbers of boreholes shall be taken by the Contractor, if deemed necessary, in areas where the soil strata are complex. The contractors shall also carry out simple probing techniques at closer interval to reaffirm the types of soils to be encountered along the pipeline route. The Contractor should submit Geotechnical profile along the route of the pipeline and buried services data for particular work package as per the schedule for submittals. The Contractor shall collect soil/ rock samples at the level of the proposed pipeline in presence of the Engineer's represent and get the same tested for Unconfined Compressive Strength (UCS) in the Municipal laboratory or at any laboratory approved by the Engineer. Samples taken in absence of the Engineer's representative and tested in a laboratory not approved by the Engineer shall not be valid for determination of the any parameters. All such surveys & investigations to be carried out by the Contractor at his own cost and No payment will be made for this at any stage of the

project.

6.8 Groundwater investigation.

Ground water condition is one of the critical data required when selecting the micro-tunneling system. Ground water affects the safety of the excavation face, start and exits of the tunneling/ drilling equipment from the shafts. Uncontrolled extraction of water from the surrounding during excavation can affect the adjacent structures. Peizometric pressure, water leakage, ground water level and etc. shall be carefully checked before and during tunneling/ drilling works. All such surveys & investigations to be carried out by the Contractor at his own cost and No payment will be made for this at any stage of the project.

6.9 Ground stabilization

It shall be the responsibility of the Contractor to maintain stable soil conditions at the jacking face to prevent loss of ground above the jacking operation and movement of the surrounding earth. The methods of maintaining face stability and preventing ground movement and subsidence shall be by means of fluid slurry or earth pressure applied to the tunnel face. Alternatively, unstable ground ahead of the jacking face may be stabilized by the injection of suitable chemicals. Methods which require dewatering of the ground will not be accepted, nor will methods which may lead to significant ground loss. Movement or settlement of structures, railways, utilities and pavement shall be monitored by the Contractor during the micro-tunneling operation and reported to the Engineers and railway or highway authorities.. The Contractor shall make provision to install peizometers, settlement plate etc. within railway compounds in his rates for pipe installation If movement or settlement occurs, especially within the railway compounds, which in the opinion of the Engineers may cause damage, the Contractor shall take immediate action to prevent further movement, settlement or damage. The Contractor shall repair at his risk and cost any damage and restore structures, railway lines and pavements to the satisfaction of the Engineer. The contractor shall pay expenses if the owner or concerned agency such as Railway elects to carry out such repairs by themselves. All such surveys & investigations to be carried out by the Contractor at his own cost and No payment will be made for this at any stage of the project.

6.10 Setting out

The Contractor shall be deemed to have thoroughly examined the sites , the location of the buried services, availability of space for footprint, access to sites & etc. and adjusted the pipeline alignment as deemed necessary and obtained approval of the final pipeline alignment from the Engineer before commencement of the setting out. He shall set out and mark on the ground the proposed pipeline route and the locations of the jacking and receiving shaft and the area they occupy for the Engineer's inspection and approval. The Contractor shall be solely responsible for the accuracy of the setting out and any expenses or delays arising from errors made in the setting out shall be borne by the Contractor. Any consequential work or abortive work carried out by the Contractor to rectify the errors shall be entirely borne by the Contractor. All such surveys & investigations to be carried out by the Contractor at his own cost and No payment will be made for this at any stage of the project.

6.11 Site layout

The working space at the sites is often restricted and hence the site layout has to be planned carefully in advance to set-up the equipment and accessories. All such surveys & investigations to be carried out by the Contractor at his own cost and No payment will be made for this at any stage of the project.

6.12 Construction of Jacking and Receiving Shaft

The Jacking Pit and Receiving Pit shall be constructed by the method of well sinking. The Contractor shall submit to the Engineer for approval, detailed dimensioned drawings, design calculations, and methodology for the well sinking works, including cutting edge details, curb design, staining, sinking procedure, dewatering arrangements, bottom plug, and stability calculations.

Each pit shall be provided with a separate ladder bay for safe access, isolated from the area used for handling materials and equipment. The pit construction shall be watertight and designed to prevent ingress of groundwater, soil, or pressurized slurry into the shaft. The Contractor shall ensure that the pit remains dry at all times and shall provide suitable drainage sump(s), pumps, and dewatering arrangements for removal of ingress water during sinking and tunneling operations.

The Contractor shall be deemed fully aware of the serious consequences to tunneling equipment, accessories, and works in the event of flooding of the pit and shall take all necessary precautions to prevent such occurrences. Adequate protection shall be provided against surface runoff entering the pit. The Contractor shall be solely responsible for any consequential delays, damages, or additional expenditure arising due to flooding or instability of the pit.

The pit base and bottom plug shall be designed to withstand all imposed loads from the tunnel boring/jacking equipment, ancillary equipment, and operational loads during pipe jacking activities. Since the pits are to be constructed by well sinking method, separate shoring or trench sheeting shall not be required.

The sizes of the Jacking Pit and Receiving Pit shall be kept to the minimum practicable dimensions consistent with site constraints and operational requirements. Equipment manufacturer's data regarding the required pit dimensions shall be submitted to the Engineer along with the bid. The pit dimensions shall adequately cater for the jacking frame, thrust wall, guide rails, feed pumps, entrance ring, handling equipment, and other ancillary arrangements required for safe and efficient execution of the works.

The rate for construction of Jacking Pit and Receiving Pit, including well sinking works, dewatering, protection measures, temporary works, and all incidental items necessary for completion of the works, shall be deemed to be included in the relevant BOQ item, and no separate payment shall be made.

6.13 Construction of Thrust Wall

Thrust wall shall be designed and constructed by the contractor to the approved details. The thrust wall shall be reinforced or unreinforced concrete constructed against the wall of the jacking shaft. The Contractor shall ensure that the thrust wall is constructed as an independent structure and it shall not interfere with the jacking shaft or the floor when jacking force is applied on to it. Contractor shall indicate in his submittals the construction details of the thrust wall showing details on how the wall be made independent of the jacking shaft structure. The contractor shall ensure that the thrust wall and the soil behind are in complete contact and there is no gap between them. The contractor shall further ensure that the thrust wall shall effectively transfer the jacking force on to the soil behind and that the ground behind is capable of withstanding the jacking force. In the event that there is gap between the thrust wall and the soil behind, the Contractor shall arrange the gap to be filled with approved cement grout before loading the thrust wall.

6.14 Installation of Guide Rails

The contractor shall design and fabricate the guide rail / Jacking frame in accordance with the microtunneling equipment manufacturer's details and install it firmly onto the floor of the jacking shaft. He shall ensure that the guide rail / Jacking frame is installed to the correct grade, levels and alignment. It

shall be also square to the pipeline alignment at all times and not disturbed due to forces arising from the jacking operation. He shall arrange with the Engineer's representative to check the level, alignment etc of the guide rail and obtain the Engineer's endorsement before commencing guide the pipe jacking work.

6.15 Entrance and Exit Arrangement

One of the most critical micro-tunneling operations is the launching and retrieval (entry and exit) of the micro-tunneling machine. Often this process takes place well below the water table. In those cases, it is critical that the contractor implement adequate engineering measures including stabilization of unstable soil by grouting or other means to prevent soil and water inflows into the shaft. It is common practice to install a rubber seal at the entry and exit. The seal is to prevent the flow of ground water or lubricant (used for reducing the frictional resistance) through the shield/pipe entry opening on the shaft wall. An exit ring must be provided without exception if the strata at the level of exit happens to be loose. The contractor shall plan this work well in advance and fabricate the fittings and rubber seal as per approved method.

6.16 Soil Stabilization at the Tunnel Entry and Exit.

In addition to the seal, it may be necessary to stabilize the soil behind the entrance wall. This is to prevent any free flow of unstable soils into the pit when opening is made for the shield to enter into the ground. Chemical grouting, cement grouting, jet grouting, piles, ground freezing or temporary shoring are some methods commonly used by the contractors to prevent the soil flow into the shaft.

6.17 Jacking System

The hydraulic jacking system shall be installed against a purpose built thrust wall in the jacking shaft. The substantial force required for jacking pipes and the tunneling machine shall be provided by high pressure jacks driven by hydraulic power packs. The ram diameter and stroke of the jacks may vary according to individual contractor's technique and to suite site conditions. The jacks shall be mounted on specially made frames so that the jacks are square to the pipe alignment. The jacking frame shall be firmly supported to the floor so that it does not move during jacking operation. A push ring shall be used to transmit the jacking force evenly to the pipe. There are jacking systems with multiple strokes or long stroke (3m or 2.43m long), mounted on a specially made jacking frame available to push a full length pipe in a single setting. The system does not require the use of spacers and hence a substantial increase in productivity can be achieved by using multiple stroke jacking system.

6.18 Jacking force.

The Contractor shall calculate the expected jacking load for each micro tunnel drive well ahead of designing the jacking pipes. Accurate estimation of the jacking load is necessary to determine the pipe wall thickness, the need for intermediate jacking stations and lubrication requirements, types of jacking system and thrust block design. The overall jacking force depends on the type of surrounding soil, depth of cover, pipe materials, diameter and the overall length of the pipeline. The total jacking force essentially consists of two components, "Frictional force around the pipeline" and the balancing force at the tunnel face called "Face Pressure". The Contractor shall use appropriate geo-mechanics formulae and guidelines for computing the jacking force. The contractor shall calculate the anticipated jacking force for each drive and submit his calculation to the Engineer for approval. The Contractor shall be solely responsible to ensure that the pipes are not subjected to excessive jacking force or tortional force so as to crush them. If such thing occurs the contractor shall have to remedy the situation at his risk and cost.

6.19 Pipe Lubrication System

The boring machines are commonly designed to overcut about 10mm (in some cases up to 20mm) around the external diameter of the pipeline. The pipeline can, in theory, be jacked freely through a fluid medium by injecting a clay based (bentonite) or polymer-based lubricant into this annulus. In practice, however, fluid losses may occur into the surrounding ground. The contractor shall carefully monitor the jacking force and use appropriate lubrication system, to bring down the jacking force within the allowable jacking force for the pipe.

6.20 Ventilation

The Contractor shall provide adequate ventilation and efficient apparatus to keep all excavations, tunnels and pipelines free from all dangerous gases, whether generated in the soil strata or otherwise, and he shall take precaution to ascertain that they are in a safe condition before allowing his workmen to descend. While working in existing pipeline or manhole, the Contractor shall provide air blowers to ventilate the place as sewage gas usually contains a high proportion of hydrogen sulphide, methane and other toxic gasses which in combination with oxygen is explosive. Approved gas monitors/detectors and oxygen meters shall be used to ensure that the place is free from all dangerous gases. The Contractor is required to appoint a Supervisor/ Safety Officer to ascertain that the pipeline or manhole is in a safe condition before allowing his workmen to descend and work. No smoking or naked flame shall be allowed in the pipeline or manhole. Monitoring of the air quality shall also be carried out regularly by the Contractor's supervisor while work is in progress and work shall be immediately suspended should unsafe conditions develop. The Contractor is warned that besides performing any work in existing pipeline or manhole, connecting to or breaking into existing pipeline or manhole also poses potentially hazardous conditions. The existing pipeline or manhole to which connection is to be made should therefore be thoroughly ventilated and certified as safe by the Supervisor/ Safety officer before workmen are allowed to execute the connection. The Contractor and his Supervisor/ Safety officer shall be solely responsible for safety of persons entering in to the pipelines or confined spaces like manholes/ pits.

6.21 Continuous working

If, in the opinion of the Engineer it is necessary, by reason of the safety of the works, or the restoration of interrupted services or for any other reason whatever, the Contractor shall, when so ordered carry out the works or any portion thereof continuously by day and by night without extra charge and allow for such a contingency in his Bid price. It shall be clearly and definitely understood by the Contractor that no claims in respect of any of the above shall be allowed in the settlement of the Final Account.

6.22 Trial holes

The Engineer may order the Contractor to make trial excavations/ trial bores and to submit a report and/or drawing of the date obtained from each such excavation.

6.23 Railway Requirements

1) The orientation and tentative barrel length of the Pipe are shown in GAD shall be constructed with Micro-Tunneling method. The length can be increased or decreased during execution.

2) There may be some service lines such as electrical cables, S&T cables, water pipe lines and CC drains crossing the Pipes above and below the ground levels. These should be diverted or supported as per the satisfaction of the site in-charge of Railway and after the completion of

the work these to be restored in their original alignment. There should not be any damage to these service lines during execution. Contractor is entirely responsible for any damages and cost will be borne by Contractor. No Extra cost will be paid to the Contractor.

3) The work is to be carried out in **running rail traffic conditions**. Therefore, contractor will have to observe all the safety precautions imposed by the Railways/BMC time to time. **For any delay in getting the traffic blocks, approval to speed restrictions, decision pertaining to the work by the Central Railway, contractor will not be compensated**.

4) The work has to be done by observing all safety precautions under directions of Railway Engineer at site without causing any disturbance to road/rail traffic and Railway area. Adequate look out men to warn against approaching train shall be posted and the working area shall be cordoned off by suitable fencing/sheeting at the contractors cost.

5) The Pipe pushing work by micro tunneling has to be executed true in line, levels, etc. the contractor shall provide sufficient surveying and mathematical instrument etc. and experienced Railway Engineer and Rtd. P. Way Engineer to ensure Safety and Quality of work strictly as per the specifications.

6) The contractor shall submit the programme as well as bar charts depending upon site problems and review the same at very close interval of 15 days. The programme and bar chart shall details gainful employment of mobilization and for their flexibility depending upon available or otherwise of work front.

7) There shall be sufficient documentation of the work in the form of test records, registers, challans, survey, records of level, photographs, video shooting, etc at the cost of the contractor. The contractor shall provide the necessar y registers for recording test result jointly, from stationary etc. at his cost.

8) Contractor shall have to obtain completion certificate from the railway department.

6.24 TRAFFIC MANAGEMENT: -

The contractor has to plan his work including stacking of construction materials and placing of machinery such that it will in no way affect the traffic on existing. A board of size 1.0 m x 1.80 m indicating name of the work, name of the owner i.e. BMC, name of the consultant, Cost of the work, name of the contractor shall be displayed at suitable location and blinkers at night if necessary. Traffic diversion/caution boards of suitable size shall be provided as directed. All that is stated above in incidental to the work and no separate payment will be made to the contractor.

6.25BLASTING OF ROCKS/BOULDERS

No blasting of rock / boulders is allowed. Excavation in rock/boulder will have to be done

only by chiseling.

6.26 **PRECAUTIONS WHILE WORKING IN THE VICINITY OF TRACK**

a) When the work is required to be done along, below or near existing railway track, the contractor(s) shall take steps as are necessary for the safety of the track, labour working at site. He/they will also be required to make programme of his/their work so as not to interfere with the movement of trains. No extra payment shall be allowed for these precautions and also for crossing tracks required during the execution of the work. It should be ensured that the ballast of the railway track is not spoiled or mixed with earth or disturbed.

(b) In addition to the precautions taken by the contractor for the safety of the track and labour, it may be necessary to post flagmen in some locations as an additional safety measure. The contractor(s) shall be fully responsible for any damage to or trespass caused by his/their men to surrounding structure, BMC / Railway bears no liability whatsoever on this account.

(c) Instructions given by Railway Authority regarding safety shall be strictly followed during the execution of work.

6.27 SAFETY PRECAUTIONS

a) The contractor(s) shall at all times adopt such safe methods to work as will ensure safety of structures, equipment and labour. If at any time the BMC / Central Railway find the safety arrangements unsafe, the contractor(s) shall take immediate corrective action as directed by the BMC / Central Railway in the matter shall in no way absolve the contractor/s of his/their sole responsibility to adopt safe working methods.

b) The contractor/s shall design and execute temporary works such as form work and supports, so as to ensure absolute safety of the contractor/s personnel as well as Railway/ BMC staff and personnel engaged on the work. The contractor/s should indemnify the BMC against damages and injury to workmen. BMC reserves the right to enforce safety regulations on the contractor/s and recover any cost which may be incurred for the purpose.

c) Whenever a lorry or any other form of road transport or machineries are required to ply along or in the vicinity of a running line or any other railway track where railway engines or trains are scheduled to move, the contractor shall inform the engineer in writing of such requirement specifying the locations and the duration of time over which such specified road vehicles have to operate in the area (for loading, leading or unloading of each, ballast or any other material, plant or equipment) without any obstruction or dislocation to the running of trains. The contractor also should furnish the particulars of vehicles such as R.C. book and the name and photograph of drivers with valid license copy and attended retained for each legal to enable the engineer to issue necessary along the holder to operate the vehicles, with such restrictions regarding the durations and/or

locations as are considered necessary. Such permit shall be returned to the engineer as soon as the work for which it is issued is over.

d) The contractor shall execute a bond undertaking to ply to road vehicles or machineries in a safe and satisfactory manner and strictly in accordance with the stipulations and other conditions specified by the engineer to engage and retain only the permit holder to be the contractor agent in charge of the vehicles while driving or at rest. The person in charge of the vehicles and the attendant shall at all times be vigilant and on the lookout for signals from the lookout men, flagmen or other personnel available site with a view to stop for regulate the road movement so as to ensure adequate margin of safety for the timely passage of an approaching trains or railway engine, without any delay or detention.

e) The contractor shall also be bound by the provision of this agreement, to ply the road vehicles only with adequate margin of safety, well clear of the fixed structure profile of infringement, so stipulated in the rules made under the Indian Railway Act and to seek and be guided by the signal and other directions of any lookout men for other personnel retained for the purpose of ensuring safety, and to ensure care and vigilance while turning, reversing or moving the road vehicles in any other a manner, at an inclination tothe running railway track or the siding, as the case may be.

f) The contractor also undertakes to make good at his own cost any inconveniences, loss, damage, or other expenses caused to or incurred by the railway administration and to pay such amount as determined by the engineer to be recoverable from the contractor as penalty or damage for any omission, negligence, careless, oversight or accidents on the part of any of the contractor's agents, drivers or attendant or any person to whom the services of the holder of the permit (issue by the engineer) has been lent otherwise made accessible or available.

g) Any breach of these conditions by the contractor and/or his agent affecting the safety of movements of trains, engines of other rolling stock of the railway shall constitute a breach of contract by the contractor entailing liability for termination of contract for default on the art of the contractor. Contractor will be held totally responsible.

h) The contractor will be permitted to make use of the level crossing for crossing the track after observing the standard railway safety precaution. If such precautions are not taken these will be enforced by the Central Railway by adequate arrangements and the cost thereof shall be recovered from the contractor.

i) The contractor/s shall inspect the proposed site of work and acquaint himself/themselves with site conditions working hours storing spaces for materials, approach/pathway available etc. and all relevant items connected with the execution of work. No claim shall be entertained from the

contractor making his own arrangements for approach roads from outside railway land and the contractor will bear the entire expenses such as road taxes payment on right of way etc. outsiders.

j) During process of Micro Tunneling and block period the contractor shall arrange for all equipment, labour (skilled or unskilled), gang as per Railway Norms as required by railway and reinstate the track in the vicinity area prior to end of block period for movement of rail traffic. The contractor at his own cost shall arrange necessary lighting arrangement during night as directed by Railway /BMC. The contractor shall take all necessary precautions, safety measures of the workmen, railway infringements, etc. during the block period. For excavation nearer to the railway track proper shoring and strutting shall be used, shoring and strutting arrangements shall be approved by the Railways / BMC.

k) A packing gang as per requirement of Railway / BMC will be maintained round the clock by Contractor while Tunneling work is in progress for maintaining the track correctly as per Railway Authority.

l)Testing of embankment soil for determining the pushing force, etc. shall be the responsibility of the contractor.

m) Necessary suitable shoring shall be provided for casting of cast in situ box & transition portion and other places where required and shoring to be approved by the Railways /BMC.

6.28SHIFTING OF ELECTRICAL/TELEGRAPH WIRES

If shifting of high-tension grid towers/electric telegraph/telephone wires or posts, etc. are required, following procedure to be adopted. It is expected that the electric line/tower will be shifted in good time but in case, there is any delay on this account, suitable extension in date of completion will be considered and given to the contractor for only the effected portion and no compensation whatsoever in this respect or due to the delay thus caused will be payable and the contractor has to adopt such methods of executions of earthwork and/or bridge work so as not to cause any damage to the existing structures, lines, etc.

6.29 PROTECTION AT THE WORK SITE

a) **On railway track where the train traffic will be operational during the execution of the contractor work, the protection of the works site as considered appropriate and adequate shall be arranged by the contractor at his own cost**.

b) Notwithstanding the aforementioned protection at the works site provided by the engineer's representative, the contractor shall be responsible for provided appropriate and adequate system for warning the contractor's workmen about the train traffic on or in the vicinity of the site of work. The decision of the engineer's representative whether the facilities provided by the contractor in this regard

are appropriate and adequate or not, shall be final and conclusive.

c) A large number of construction activities are likely to hamper the movement/ handling of passengers. Hence, these activities have to be carried out within specified time frame exactly in the manner indicated by Engineer. Certain activities will be permitted only on holidays or during nighttime and completed before the traffic builds up. Contractor will ensure execution accordingly and keep the space unhindered for smooth flow of passengers.

d)There may be some restrictions in area available for stacking of materials, fabrication/ erection of structural steel, deployment of machinery, transport vehicle, etc. Contractor will have to plan the work in such manner that movements of public using the station as well as the movement of rail traffic does not get affected. Contractor will have to get his plan approved by Engineer in-charge before starting work.

e) The work of dismantling etc. is to be done in a area which is being used regularly and continuously by the public as well as railway employees and where main line trains are running round the clock. The contractor should ensure all safety precaution and safety measures to be followed during the course of execution of dismantling work under the strict guidance of railway Engineer at site. These works will be permitted only during specified hour/period.

f) In case any damage takes place to the railway property or any other public property, the same shall be recoverable from the contractor as per rules in vogue.

6.30Other Conditions

1. The construction material brought at site shall be as per the relevant IRS/BIS standard and offered to the site Engineer for his approval before use. It will be entirely at the discretion of the site Engineer whether to accept or reject the materials brought at site after the prima facie inspection. In case any lot is rejected the same shall be removed by the contractor at his own cost within 48 hours.
2. The test certificate of material shall be produced by the contractor as per the directions of Engineer-in-charge.
3. In spite of the production of above test certificate, it shall be at the discretion of the Engineer- in-charge to take random samples. The contractor will have to make all arrangements for taking the sample as instructed by Engineer- in-charge and get the samples of cement/steel and other material tested from the Govt. approved lab/reputed lab at his own cost.
4. The structural steel as well as other materials used in pipe pushing work by micro tunneling after dismantling shall become the property of the contractor and the contractor shall have to take away all the materials and clear the site within the period of 10 days from the site or work place.
5. The contractor will submit his scheme in detail incorporating all features like cutting edge, location and size of intermediate jacking station capacity of jack proposed fail to ventilation opening, emergency exit and its covering during jacking operation. The scheme should be prepared in such a way so that there is no disturbance to train services and safety is not jeopardized during execution.

6. The rates quoted by the tenderer/s should be inclusive of all taxes, levies, royalty charges/toll charges etc. leviable by State Government or by local authorities excluding GST. The rate shall be of all sales/ Turnover taxes/ work tax on work contract in the state of Maharashtra. No claim for increase in taxes will be entertained by BMC.
7. Contractor shall deploy modern communication equipment like mobile phone, walkie-talkie, P&T phone, wi-fi, internet etc. at site and will make them available for Railway's authorized representatives also without any charge.
8. No work shall be carried out until and unless all drawings are approved by Railways and all design calculations clarifications required are furnished and got approved.
9. Procurement of required machinery and plants, micro tunneling equipment, jack, pumps intermediate jacking station etc. should be done by contractor at his own cost and no extra payment will be made. For reduction of friction between soil and M.S. pipes during pushing, suitable arrangement will have to be made to reduce the disturbance of track to the minimum.
10. Jacking of the M.S. pipe will be done under the railway track under speed restriction imposed by Railways. The necessary micro tunneling scheme has to be developed by contractor and is to be approved by Railways before commencement of works.
11. Payment shall be made only for finished section of concrete quantity. Poorly executed concrete will have to be demolished and repair shall not be allowed to be carried out.
12. The track disturbance during the micro tunneling works should be as minimum as possible. The micro tunneling will be carried in presence of Railways/BMC representative only. The contractors should make himself conversant with working of train and corridor blocks available before quoting his rate.
13. Before commencement of work contractors has to construct water proof cement storage space of adequate capacity with proper floor.
14. The contractors should use only potable water for construction purpose including curing and they should make their own arrangement for potable water and power supply at their own cost. BMC will not provide water and electric connection for execution purpose.
15. Ready Mix Concrete shall be permitted with the approval of PMC. RMC will be permitted with concrete pump/ concrete placer boom only unless otherwise permitted by the Engineer- in-charge.
16. The contractor shall satisfy the Engineer that ready mixed concrete complies with the specification for concrete and that the manufacturing and delivery resources of the proposed supplier are adequate to ensure proper and timely completion of each concreting operation. The proposed supply depot shall be open to inspection by the Engineer at all times.
17. The specified requirements as to the sampling, trial- mixing, testing and quality of concrete of various grades shall apply equally to ready mixed concrete which shall be made and delivered in ac-

cordance with relevant IS Codes. The contractor shall provide every additional facility, which the Engineer may require for the supervision and inspection of the batching, mixing and transporting of ready mixed concrete.

18. Contractor shall depute retired P. way mates / PWI and adequate P. way labour for maintenance of track during / after micro tunneling operation as directed by Railway /BMC representative. No payment shall be made for the same.
19. Micro tunneling operation will normally be done under the speed restriction only. However, jacking under other than track portion may be permitted in other than speed restriction. Engineer's decision in the matter will be final. In case of non-availability of speed restriction BMC/railway will not compensate for any loss or inconvenience.
20. Retro reflective speed restriction Boards required at work site as per Railway including look out man/watchman will be provided on all affected lines and maintained by the contractor at his own cost.
21. Contractor shall take own necessary precautionary and protective measures and make necessary arrangements at his own cost against possible damage to their machineries/ materials/ equipment/plants etc. at site. No compensation/claim shall be entertained on this account.
22. During execution of any activity at site, contractor should inform in advance to Railway/BMC.
23. Suitable size spacers of high density polyethylene or other similar material at 1.0 m interval shall be installed in between carrier and casing pipe to prevent carrier pipe from farming metallic contact with casing pipe. No separate payment for fixing of spacers between carrier pipe and casing pipe. Contractor to quote accordingly for the same.
24. No payment will be made for incomplete tunneling work. The contractor is fully responsible if MTBM is stuck up in railway premises. No claim will be entertained in such case. The contractor to note that contractors are totally responsible for successful completion of work under Railway and other utility premises
25. INSPECTION, REGISTER AND RECORDS
26. The contractor/s shall maintain accurate records, plan and charts showing the dates and progress of all main operations and the Engineer shall have access to this information at all reasonable times. Records of tests made shall be handed over to the Engineer's representative after carrying out the tests. The following registers will be maintained at site by the Contractor(s).
27. (i) Site order Register
28. The Contractor/s shall promptly sign orders given therein by the Engineer or his representative or his superior offices and comply with them. The compliance shall be reported by the contractor/s to the Engineer in good time so that it can be checked.
29. (ii) Cement Register

30. This register will be maintained to record daily receipt and issue of the cement duly indicating the balance quantity. The quantum of the work done for the cement issued on a particular date will also be maintained.

(iii) Steel Register

The register will record the receipts of steel items and details of reinforcements and members wherever steel is used.

(iv) Labour Register

This register will be maintained to show daily strength of labour in different categories employed by the Contractor/s.

(v) Log book of events Register

All events are required to be chronologically logged in this book shift wise and data wise.

(vi) Inspection Register

An inspection register shall be maintained at the site of work by the Railway where to instructions regarding the working etc. shall be record by the Engineer orhis executive subordinates. It is the liability of the contractor or his representativeat the site to note such instructions wherever asked upon to do so and take action accordingly and comply with these instructions strictly, within reasonable timeand without any delay.

(vii) Material Testing Register

(viii) Programme and Progress Register

(ix) Hindrance Register

(x) Drawing Register

(xi) Track Parameter (Cross Level) Record Register

Register at item (ii), (iii), (iv), (v), (vi), (vii), (viii), (ix), (x) & (xi) will be signed by Contractor's Engineer, BMC staff and PMC.

SECTION 7

SCOPE OF WORK

This page is intentionally kept Blank

SCOPE OF WORK

This particular tender comes under the category of "~~Regular, Routine and Maintenance works~~/ Original and New construction works/ ~~For Other Special works~~".

The scope of work consists of:

1. Excavation for Jacking Pit in Navrang Compound and Receiving Pit on Mori Road Junction, Senapati Bapat Marg by Well Sinking and allied works.
2. Laying of 1200mm dia. (16mm thick) Mild Steel (MS) carrier pipe through 1500mm dia. (22mm thick) MS casing pipe by Microtunneling from Navarang Compound (point F) to Mori Road Junction (point G) below Railway tracks near Mahim Railway station in G/North ward.
3. Laying of 1800 mm dia. MS pipe from Jacking pit (point F) to Upper vaitarna main and connecting the same to existing 2700mm dia. UV Water main at point R and allied works in NavarangCompound..
4. Laying of 1800 mm dia. MS pipe from Mori Road Junction(Receiving pit) point G and connecting the same to existing 1800mm dia. Water main at point H and allied works on Senapati Bapat Marg.
5. Laying of 900 mm dia. MS pipe near point H and connecting the same to existing 900mm dia. Water main at point S and allied works on Senapati Bapat Marg
6. 4 nos of Cross connections of 1800mm X 1200mm dia. and fixing of 1800mm dia. BFV's in Navarang Compound near Vaitarna main (Jacking Pit) & at Mori road junction (Receiving Pit) respectively.
7. Cross connection of 2700mm X 1800mm dia. and fixing of 1200mm dia. BFV's in Navarang Compound near Upper Vaitarna main at point R.
8. Cross connection of 1800mm X 450mm dia. and fixing of 450mm dia. BFV's (Point A) in Navarang Compound near Vaitarna main.
9. Cross connection of 1800mm X 1800mm dia. (Point H) on Senapati Bapat Marg
10. Cross connection of 1800mm X 900mm dia. (Point S) on Senapati Bapat Marg.
11. Cross connection of 1800mm X 1800mm dia. (Point O) on Senapati Bapat Marg
12. Commissioning of all distribution mains.
13. Excavation for above works, encasement of water mains & reinstatement of all works.

Note: - Intending tenders shall carefully read the tender conditions 6.114 (i.e. Special Directions to E-Tenderers) & 6.115 (Special Conditions of Contract) and 6.149SPECIAL CONDITIONS OF THE CONTRACT FOR EXECUTING MICRO TUNNELING WORK IN RAILWAY PREMISES **before submitting their bid.**

The new R3-Unified Schedule of Rates & USOR of other department are applicable which are available on BMC portal: http://portal.mcgm.gov.in

This page is intentionally kept Blank

SECTION 8

BILL OF QUANTITIES

This page is intentionally kept Blank

BILL OF QUANTITIES

NAME OF THE WORK :-(HE-C-CT-IMPRO-09) Laying of 1200 mm dia. 2 nos of MS water carrier pipe through 1500 mm dia. (2 nos) MS casing pipe by Micro tunneling method below railway track at KM 13/250-285 near Mahim Railway station, Mahim G/North ward in Zone-II.

Abstract Sheet

Sr.No.	Description	Qty.	Unit	Rate	Amount
1	**R3-RW-10-49**				
	Excavation in reinforced OR pavement grade concrete M-20 & above by using modern machinery (poclain with rock breaker, etc.) including with stacking of excavated material	121.00	Cum.	1663.00	201,223.00
2	**R3-HE-8-27-A**				
	Cutting of exsisting cement concrete road upto specified depth by using Di-amond Saw machine etc. complete in all respects and as directed by Engineer InCharge.	388.00	Rmt	1308.00	507,504.00
3	**R3-CS-EW-3**				
	Excavation for foundation, substruc-tures, basements, tanks, sumps, walls, chambers, manholes, trenches, poles, pits & general building works in soft/ disintegrated rock, sand	1011.00	Cum.	644.00	651,084.00
4	**R3-CS-EW-4**				
	Excavation by chiselling by manual operations, pneumatic breaker, ham-mer, drilling, compressor breaker, jack hammer etc. for foundations,	537.00	Cum	1347.00	723,339.00
5	**R3-CS-EW-1**				
	Excavation for foundations, substruc-tures, basements, tanks, sumps, walls, chambers, manholes, trenches, poles, pits & general building works in all types of soils, vegetable	3497.00	Cum	387.00	1,353,339.00
6	**R3-CS-EW-5**				

	Excavation by using splitters for foundations, substructures, basements, tanks, sumps, walls, chambers, manholes,	54.00	Cum.	4433.00	239,382.00
7	**R3-CS-EW-7-a**				
	Extra over the items CS-EW-03 to CS-EW-06 for lift from 1.5m to 3.0m.	230.00	Cum	164.00	37,720.00
8	**R3-CS-EW-7-b**				
	Extra over the items CS-EW-03 to CS-EW-06 for lift from 3m to 4.5m.	304.00	Cum	294.00	89,376.00
9	**R3-CS-EW-7-c**				
	Extra over the items CS-EW-03 to CS-EW-06 for lift from 4.5m to 6.0m.	279.00	Cum	423.00	118,017.00
10	**R3-CS-EW-7-d**				
	Extra over the items CS-EW-03 to CS-EW-06 for lift from 6.0m to 7.5m.	93.00	Cum	553.00	51,429.00
11	**R3-CS-EW-7-e**				
	Extra over the items CS-EW-03 to CS-EW-06 for lift from 7.5m to 9.0m.	186.00	Cum	682.00	126,852.00
12	**R3-CS-EW-7-f**				
	Extra over the items CS-EW-03 to CS-EW-06 for lift from 9.0m to 10.5m.	269.00	Cum	812.00	218,428.00
13	**R3-CS-EW-7-g**				
	Extra over the items CS-EW-03 to CS-EW-06 for lift from 10.5m to 12.0m.	119.00	Cum	942.00	112,098.00
14	**R3-CS-EW-2-a**				
	Extra over above item CS-EW-1, 15 & 16 for lift from 1.5m to 3.0m.	1232.00	Cum	91.00	112,112.00
15	**R3-CS-EW-2-b**				
	Extra over above item CS-EW-1, 15 & 16 for lift from 3.0m to 4.5m	718.00	Cum	137.00	98,366.00
16	**R3-CS-EW-2-c**				

	Extra over above item CS-EW-1, 15 & 16 for lift from 4.5m to 6.0m	93.00	Cum	221.00	20,553.00
17	**R3-CS-EW-2-d**				
	Extra over above item CS-EW-1, 15 & 16 for lift from 6.0m to 7.5m	279.00	Cum	305.00	85,095.00
18	**R3-CS-EW-2-e**				
	Extra over above item CS-EW-1, 15 & 16 for lift from 7.5m to 9.0m	93.00	Cum	389.00	36,177.00
19	**R3-CS-EW-2-f**				
	Extra over above item CS-EW-1, 15 & 16 for lift from 9.0m to 10.5m	38.00	Cum	473.00	17,974.00
20	**R3-HE-8-4**				
	Providing and laying 200 mm thick hand sets dry **rubble soling** including filling the interstices with small chips, ramming etc.	650.00	Sqm	319.00	207,350.00
21	**R3-SWD-15-A**				
	Providing and laying RMC (Ready Mixed Concrete) M-15 grade Plain cement concrete in foundation including boxing,curing by any means, etc. complete as specified and/or as directed by Engineer-in-Charge.(For PCC below MS pipe)	140.00	Cum.	6002.00	840,280.00
22	**R3-SE-13-1**				
	Excavate in tunnel by micro tunnel boring machine for installing 600mm diameter sleeve or carrier for sewer line or water main to correct grade and alignment using slurry or mixed shields in any type of strata including marshy land, soft clay, murum, soft/hard rock and/ or boulders of any strength and hardness, dewatering, etc. but excluding muck disposal from shaft site complete as per specifications and as directed by the Engineer.				
	e) 1600 mm dia -do- -do-	280.00	Mtr	166677.00	46,669,560.00

23	**R3-SE-13-4**				
	Approved 1200 mm diameter mild steel (M.S) pipe (16mm thickness) sleeveconforming to jacking pipe as per IS 3589/ASTM/BS ; supplied, jointed and installed to correct line and grade by pipe jacking for providing sewer by trenchless technology etc. complete as per specifications and as directed by the Engineer				
	For 1200 mm dia W.M. (16mm thick-ness) -do- -do-	280.00	Mtr	77727.00	21,763,560.00
	b) For 1500 mm dia Casing Pipe (22mm thickness) -do- -do-	280.00	Mtr	108229.00	30,304,120.00
24	**R3-HE-2-19**				
	Providing & Supplying, loading, trans-porting on site, unloading, lowering in trenches, assembling and jointing mild steel pipes to site of work fabricated in any ISI/ ISO certified company, from mild steel plates of approved quality and thick-ness, confirming to IS 3589 . The M.S plates shall be long, fabricated as per IS:3589 and suitable for 10 kg/cm2 working pressure(spirally welded pipes fabricated from strips are not ac-ceptable). "No separate payment will be made for local transport at Site."				
	a) 80 mm. 6 mm thick	60.00	Rmt	1071.00	64,260.00
	k) 900 mm. 8 mm thick	30.00	Rmt	15638.00	469,140.00
25	**R3-HE-8-26**				
	Supplying, transporting and fixing S.P. fire hydrants including mouth piece, duck foot bend, S.V. as per item	2.00	Each	27348.00	54,696.00
26	**R3-HE-2-7**				
	Fabricating ,Supplying & transporting M.S. material of required thickness suitable for lead joint / mechanical joints	2800.00	Kg	76.00	212,800.00
27	**R3-WSP-5-26-B-5**				

	Providing,fabricating, M.S. pipes including short pipes (shorter than one strake length) as per specification of required diameters and shell thicknesses given below. The rate to include procurement of MS plates, transport, cutting the plates to the required size rolling, tack welding , assembling in desired lengths to form pipes, welding on automatic welding machine forming 'V edge with or without shoulder cut/root face on both the ends of pipe.	204.00	RM	49184.00	10,033,536.00
28	**R3-WSP-2-1-B-5**				
	Transporting within 500 m., laying in position to the correct line and level, M.S. Pipes with/without any out- coating on pedestals or chairs upon prepared formation. The rate to	248.00	Rmt	2721.00	674,808.00
29	**R3-HE-10-4**				
	Providing in situ internal cement mortar lining as per AWWA C 602- 76 standards to distributory CI/DI water mains, with cement sand ratio 1:1 (Cement 43 grade : Godhra				
	g) 900 mm diameter with 7.0 mm lining thickness	30.00	Rmt	948.00	28,440.00
	h) 1200 mm diameter with 7.0 mm lining thickness	280.00	Rmt	1104.00	309,120.00
30	**R3-WSP-2-19**				
	Providing and Applying Cement mortar lining of specified thickness with proportion of cement-sand ratio (1:1) by weight for underground and aboveground pipeline by	1402.00	Sqm	447.00	626,694.00
31	**R3-HE-2-12-G**				
	Field welding in all position with required number of runs, for M.S. pipes internally and/or externally including gauzing wherever necessary, Butt Jointing	863.00	Rmt	2444.00	2,109,172.00
32	**R3-HE-2-13-E**				

	Field welding in all position with required number of runs, for M.S. pipes internally and/or externally including gauzing wherever necessary, fixing appurtenances and other	259.00	Rmt	1390.00	360,010.00
33	**R3-HE-2-14**				
	Gas cutting (either square cut or V cut) pipes, plates etc.				
	c) above 10 mm up to 14 mm	1122.00	R.mt.	462.00	518,364.00
34	**R3-CS-CW-2-a-1**				
	Providing and laying in position ready mixed plain cemen tconcrete, using fly ash and cement content as per approved design mix from Engineer-in-charge and fly ash conforming to grade I of IS 3812 (Part-1) only be used as part replacement of OPC as per IS 456 and uniform blending with cement is to be ensured in accordance with clauses 5.2 and 5.2.1 of IS: 456-2000 in the items of ready mixed concrete and manufactured in fully automatic batching plant and transported to site of work in transit mixer for all leads, having continuous	960.00	Cum	6432.00	6,174,720.00
35	**R3-RW-10-30**				
	P/L RMC M-25 etc. as per item	120.00	Cum	7007.00	840,840.00
36	**R3-HE-3-16**				
	Supplying, loading, transporting on site, unloading butterflyvalves of PN 1.0 conforming to AWWA C-504 in SGI- IS 1865(Grade 500/7) material with				
	b) 450mm BFV	2.00	Each	198049.00	396,098.00
	e) 900 mm BFV	2.00	Each	511844.00	1,023,688.00
	f) 1200 mm. BFV	2.00	Each	1196726.00	2,393,452.00
	i) 1800mm BFV	3.00	Each	3478736.00	10,436,208.00
37	**R3-HE-4-5**				

	Making connection on live MS water main of various sizes, including cost of cutting, supplying, loading, transport-ing onsite, unloading, lowering in trenches, assembling of				
	bi) for 1800 x 450	1.00	Each	103918.00	103,918.00
	bl) for 1800 x 900	2.00	Each	181793.00	363,586.00
	bm) for 1800 x 1200	4.00	Each	211565.00	846,260.00
	bp) for 1800 x 1800	5.00	Each	270964.00	1,354,820.00
38	**R3-CS-MW-1-b**				
	Brick work with common burnt clay F.P.S. (non modular) bricks of class designation 3.5 and above in founda-tion and plinth in: Cement mortar 1:4 (1 cement : 4 coarse sand) etc. as	10.00	Cum	9257.00	92,570.00
39	**R3-SE-4-3**				
	Providing 20 mm thick cement plaster in cement mortar 1:2 including neat cement rendering (without water proof-ing compound) as specified & as di-rected by Engineer in Charge	40.00	Sqm	433.00	17,320.00
40	**R3-CS-CW-1-b**				
	Providing & laying M 15 c.c. in sides and haunches and/or in block coping etc. complete as specified and as di-rected…. etc. as per item.	10.00	Cum	7232.00	72,320.00
41	**R3-CS-CW-7**				
	Providing and laying in position ready mixed D**esign mix M-20 grade ce-ment concrete** for reinforced cement concrete work, using cement content as per approved design mix,	7.00	Cum	10793.00	75,551.00
42	**R3-CS-CW-18**				
	Extra and over for providing richer RMC of M-35 grade cement concrete instead of M20 (Note :- Cement con-tent considered in this item is @ 350 kg/cum as per IS 456 table showing minimum cement content.)	203.00	Cum	1213.00	246,239.00

43	**R3-BW-2-67**				
	Sinking of 9 m external diameter well (other than pneumatic method of sinking) through all types of strata namely sandy soil, clayey soil and rock as shown against each case,				
	a) Depth below bed level upto 3.0 M	3.00	Rmt	16260.00	48,780.00
	b) Beyond 3m upto 10m depth	4.00	Rmt	23846.00	95,384.00
44	**R3-BW-2-68**				
	Soft rock (9m dia well)	3.00	Rmt	37317.00	111,951.00
45	**R3-BW-2-79**				
	Sinking of 12 m external diameter well (other than pneumatic method of sinking) through all types of strata namely sandy soil, clayey soil and rock as shown against				
	a) Depth below bed level upto 3.0 M	3.00	Rmt	74187.00	222,561.00
	b) Beyond 3m upto 10m depth	4.00	Rmt	121600.00	486,400.00
46	**R3-BW-2-80**				
	Depth of soft rock strata upto 3m(12m well)	3.00	Rmt	194989.00	584,967.00
47	**R3-BW-2-41**				
	Providing, fabricating and setting out in requisite position Mild steel weighing 40 kg per meter cutting edge for RCC wells including cutting, bending to required shape as per	3.00	MT	107091.00	321,273.00
48	**R3-BW-2-43-B**				
	Providing and placing in position controlled cement concrete in M-30 grade in well curbs with minimum cement content as 400 kg/cum. water cement ratio not exceeding 0.40 and	12.00	Cum	8287.00	99,444.00
49	**R3-BW-2-51-B**				

	Providing and placing in position controlled cement concrete of M-30 grade in RCC well steining as per detailed design and drawings with minimum cement content of 400 kg/cum,	385.00	Cum	7596.00	2,924,460.00
50	**R3-HE-15-2**				
	Providing and applying two component Amine or polyamidecured surfaceTolerant Epoxy Primer on external surface of water trunkmain, ring girders, stools and roller cover etc. using	4957.00	Sqm	113.00	560,141.00
51	**R3-HE-15-3**				
	Providingand applying two component highbuild epoxy barrier / intermediate coat after curing of previous epoxy primer coat on external surface of water trunk main, ring	9914.00	Sqm	123.00	1,219,422.00
52	**R3-HE-2-16**				
	Providing and fixing MS frame and cover with its complete assembly including supply and fixing of the same etc complete for sluice valve, butterfly valves and kinetic air valves chambers	19240.00	Rs/kg	86.00	1,654,640.00
53	**R3-WSP-2-18-A**				
	a) Hydraulic testing of M.S. Pipeline to the specified pressure for the length upto 1 km. using reciprocating type pumps which should be able to provide specified test pressure,				
	3) 900mm	1.00	Km.	53345.00	53,345.00
	5)1200mm	1.00	Km.	57799.00	57,799.00
	7) 1800mm	1.00	Km.	72047.00	72,047.00
54	**R3-HE-2-3**				

	Supplying, transporting MS fabricated material on site, aligning, fixing in position, tack welding including marginal cutting, synthetic Rubber packings etc.**a)** Minor fixtures such s man hole	8.00	M.T.	74395.00	595,160.00
55	**R3-HE-8-2**				
	Removing body water from water mains etc. by means of pumps and discharging the same in nearest drain lines etc. complete as directed & as specified by Engineer In Charge				
	b) 10 H.P. Pump	50.00	Shift	5507.00	275,350.00
56	**R3-SE-1-4**				
	Providing and removing close shoring and strutting in the trenches/pits for all depths as per specifications/ drawings and or as directed by Engineer-in-charge by including walling,	521.40	Sqm	768.00	400,435.20
57	**R3-SE-1-6**				
	Providing and fixing M.S plate shoring in trench consisting of 12mmthick M.S sheet, 1.5m wide MS channel 150x75mm,at 1.5m center to centrein-cluding removal after laying sewer	1045.00	Sqm	3025.00	3,161,125.00
58	**R2-CS-PLG-22.10**				
	Supplying Hot Rolled steel sheet piles having properties described in respective specifications or/ and shown in drawings (Z or U type with sectional modulus of minimum 2500 cm3, steel grade S430 GP with minimum yield strength of 430 MPa,	175.00	Sqm	4476.00	783,300.00
59	**R2-CS-PLG-23-1**				
	Rebate on above items for extrating sheet piles on completion of work with the help of equipments like cranes and vibratory pile driver having the frequency causing very less				

	(a) For depth 0 to 5 m below ground level	-175.00	Sqm	2400.00	-420,000.00
60	**R3-RW-10-24**				
	Supply & filling sand metal, GRAV-ELLY SAND, corresponded to CLASS II/ CLASS IIIGRADING of TABLE 100.1 of MCGM road specifications for roadworks in trenches	750.00	Cum	2251.00	1,688,250.00
61	**R3-RW-2-21**				
	Providing & laying, spreading & com-pacting specified crushed stone in granular sub base course including premixing the material in mechanical mixer etc.	180.00	Cum.	2702.00	486,360.00
62	**R3-RW-2-20**				
	Providing & laying, spreading & com-pacting graded crushed stone aggregate to wet mix macadam to the satisfaction of Engineer including premixing the material with water to	130.00	Cum.	3338.00	433,940.00
63	**R3-RW-5-27**				
	Providing and applying TACK COAT with bitumen VG-30 bitumen @ 0.25 to 0.30 Kg. of Sq.mt. over prepared surface to receive bituminous mix by applying TACK COAT	40.00	Sqm	43.00	1,720.00
64	**R3-RW-5-45**				
	P/L hot Premix Dense bituminous macadam with 4.50% bitumen content of grade VG-30 to the required line,level,and camber rolling with 10/12 M.T.power ,vibratory roller &	40.00	Sqm	775.00	31,000.00
65	**R3-RW-5-26**				
	Providing and applying TACK COAT with bitumen VG-30 bitumen @ 0.20 to 0.25 Kg. of Sq.mt. over prepared surface to receive bituminous mix by applying TACK COAT	40.00	Sqm	40.00	1,600.00

66	**R3-RW-5-59**				
	P/L, mastic asphalt 40mm thick having bitumen content 10% by weight with 10/20 grade bitumen including producing the same at computerised batch mix plant, transporting the	11.00	Sqm	2233.00	24,563.00
67	**R3-RW-5-37**				
	P/L hot premix Bituminous concrete with 6.00% of bitumen grade VG-40,surface coat by mix design as per MORTH to the compacted thickness of 40 mm ,using new	24.00	Sqm	794.00	19,056.00
68	**R3-RW-10-31**				
	Providing and laying **Dry Lean Concrete** base including providing coarse and fine aggregate (with no fines i.e. 2.36 mm passing 0% to 5%) to the specified gradation using	80.00	Cum	5328.00	426,240.00
69	**R3-RW-10-29**				
	Providing & laying M-40 C.C.avg. compressive strength (As per IRC 15-2002.N.1.6) procured from M.C.G.M. approved R.M.C.plant including use of	120.00	Cum	7962.00	955,440.00
70	**R3-RW-10-35**				
	Extra & over for providing and using special admixtures/ plasticizers to achieve required crushing & average flexural strength 5.0 Mpa of M40 grade concrete in 7 days. NOTE :	120.00	Cum	623.00	74,760.00
71	**R3-RW-10-15**				
	Providing & constructing cement vatas in c/m 1:10 at 0.6mx0.6m c/c admeasuring 0.09m at bottom, 0.04m at top & 0.075m deep & maintaining the same throughout 14 days curing & removing the same thereafter,	390.00	Sqm	75.00	29,250.00
72	**R3-RW-10-07**				

	Cutting of construction & dummy joints of M-35 C.C.& above slab by mechanical means within 10 to 16 hrs of casting of bay/ slab as directed. A) transverse dummy joints 100 mm deep or 1/3 thickness of concrete pavement & 6 mm wide.	60.00	Sqm	84.00	5,040.00
73	**R3-RW-10-08**				
	Cutting of construction & dummy joints of M-35 C.C.& above slab by mechanical means within 10 to 16 hrs of casting of bay/ slab as directed. B) Longitudinal construction joints 100mm deep or 1/3rd thickness of slab & 6 mm wide.	170.00	Sqm	84.00	14,280.00
74	**R3-RW-10-10**				
	Providing & placing 5mm thick ther-mocol in dummy & construction joints immediately after cutting of joints & removing the same before dressing of dummy & construction joints etc. com-plete, as directed.	23.00	Sqm	88.00	2,024.00
75	**R3-RW-10-19**				
	Dressing of M-35 & above new C.C.pavement, dummy, transverse, longitudinal & expansion joints with hot rubberised sealing compound con-firming to IS	60.00	R.mt.	108.00	6,480.00
76	**R3-RW-10-20**				
	Dressing of M-35 & above new C.C. pavement, dummy, transverse, longitu-dinal & expansion joints with hot rub-berised sealing compound conforming to IS 1834-1984 after proper cleaning with compressed air,	170.00	Rmt	108.00	18,360.00
77	**R3-RW-10-14**				
	Providing & laying waterproof paper of 40 GSM including overlap (to be not less than 10cm) etc. complete as specified as directed.	390.00	Sqm	41.00	15,990.00
78	**R3-RW-10-09**				

	Providing & fixing in position pre-moulded asphalt filler 12 mm thick conforming to I.S. 1838 of 1983 for placing of the expansion joint, around manholes & water entrances, etc.	80.00	Sqm	364.00	29,120.00
79	**R3-RW-10-13**				
	Providing & fixing in position M.S. dowel bars of 32mm dia 55cm long & 30cm C/C whenever directed including handling, fixing, etc. complete (no extra payment will be made for applying bitumen & grease to dowel bars)	0.50	MT	99657.00	49,828.50
80	**R3-RW-10-11**				
	Providing & fixing high density polythene pipe of approved quality to fit around the dowel bars of 32mm dia at the end of expansion joints, fully greased inside, cotton waste in the	40.00	Each	31.00	1,240.00
81	**R3-RW-10-12**				
	Providing & fixing in position mild steel tie bars of 12mm dia 55cm long & 45cm C/C whenever directed including handling , wrapping with paper for half length, fixing, straightening, wastage etc. complete in all respect as directed.	0.10	MT	70944.00	7,094.40
82	**R3-RW-10-47**				
	Green cutting of construction & dummy joints of M-40 C.C.& above (Ultra thin white topping) slab by mechanical means within period of concrete strength @ 80 to 100 kg/	230.00	R.mt.	75.00	17,250.00
83	**R3-CS-CW-35-c**				
	Providing and fixing in position steel bars reinforcement of various diameters for R.C.C. pile, pile caps, footing, raft, retaining wall, shear wall, lift wall, foundations, slabs, beams,	18.50	M.T.	80080.00	1,481,480.00
84	**R3-RW-3-11**				

	Providing & fixing 80 mm thick interlocking unishape concrete pavers (monolithic- single layer precast concrete blocks) in grey cement in the carriageway having average crushing	100.00	Sqm	816.00	81,600.00
85	**R3-RW-3-13**				
	Removing & refixing interlocking concrete pavers of 80 mm thick, of any size, shape and colour considering 10% breakage area of paver block while removing the same from	100.00	Sqm	251.00	25,100.00
86	**R3-RW-3-14**				
	Removing & refixing interlocking concrete pavers of 60 mm thick, of any size, shape and colour considering 10% breakage area of paver block while removing same from	50.00	Sqm	240.00	12,000.00
87	**R3-RW-3-17**				
	Providing & fixing in the footpath, 60 mm thick Lacquer coated (Reflective) interlocking grey cement concrete pavers in Red (Terra Cotta), Black, Brown, lemon yellow or any colour	50.00	Sqm	706.00	35,300.00
88	**R3-RW-3-19**				
	Providing & fixing in the carriageway 100 mm thick interlocking concrete unishape pavers (monolithic- single layer precast concrete blocks) of grey cement coloured having	400.00	Sqm	977.00	390,800.00
89	**R3-RW-3-21**				
	Removing & refixing interlocking concrete pavers of 100 mm thick, of any size, shape and colour considering 10% breakage area of paver block while removing same from	50.00	Sqm	271.00	13,550.00
90	**R3-RW-10-70**				
	Rapid Hardening concrete 25 MPA at 6 hrs. Laying	5.00	Cum	70574.00	352,870.00

91	**R3-RW-10-25**				
	P/L R.M.C.M-20 C.C. procured from M.C.G.M. approved R.M.C. plant including use of approved makes of plasticizer/ retarder	25.00	Cum	6489.00	162,225.00
92	**R3-RW-10-57**				
	Extra Over item of stencil concrete above M20 in footpath. Providing, applying and finishing the topsurface of M-20 concrete with stamp/ stencilof approved pattern and colour,	250.00	Sqm	265.00	66,250.00
93	**R3-HE-10-6**				
	Hire charges for supplying & providing C.C.T.V. camera (including monitor, Video/CD recorder, battery backup, accessories all enclosed in a waterproof	5.00	Shift	8500.00	42,500.00
94	**R3-RT-16-34**				
	Supplying/ fixing of Two Way Raised Pavement Markers made of polycarbonate moulded body and reflective panels with micro prismatic lens capable of providing total	200.00	Nos.	433.00	86,600.00
95	**R3-RT-16-36**				
	Supplying/ fixing of Flexible Median Marker which shall be made of tough, high impact resistant, injection moulded, thermoplastic body with U shape structure with overall eight	125.00	Nos.	437.00	54,625.00
96	**R3-SE-5-1**				
	Providing & laying stone ware pipes of SP2 class including jointing with CM(1:1), filleting etc. complete as specified & directed.				
	a) 150mm dia.	40.00	Rmt	680.00	27,200.00
	b) 230mm dia	45.00	Rmt	1113.00	50,085.00
	c) 300 mm dia	50.00	Rmt	2013.00	100,650.00
97	**R3-RW-6-04**				

	Raising or lowering water entrances, hydrant key box/ sluice box/ gully trap chambers to the required level upto 20 cm including all materials, curing etc. complete as specified and as directed.	10.00	Each	945.00	9,450.00
98	**R3-RT-16-37**				
	Washing of Zebra crossing painting, dividers, kerb stones, medians, etc by scrubbing with wire brush, scrappers etc including necessary surface preparation using cleaning, dedusting, etc complete as per technical specification and directions of the Engineer-in-charge	500.00	Sqm	88.00	44,000.00
99	**R3-HE-7-2**				
	Supplying, providing laying and jointing GI pipes including all required fittings in trenches of following class and diameter by wrapping them by hessian cloth with				
	(a) 15 mm	50.00	Rmt	228.00	11,400.00
	(b) 20 mm	50.00	Rmt	264.00	13,200.00
	(c) 25 mm	50.00	Rmt	348.00	17,400.00
	(d) 32 mm	50.00	Rmt	408.00	20,400.00
	(e) 40 mm	50.00	Rmt	511.00	25,550.00
	(f) 50 mm	50.00	Rmt	625.00	31,250.00
	(g) 65 mm	50.00	Rmt	858.00	42,900.00
	(h) 80mm	50.00	Rmt	1067.00	53,350.00
100	**R3-HE-7-3**				
	Removing and replacing existing GI pipes with new GI pipes includingall required fittingsin trenches of following class and diameter by wrapping them by				
	a) 15mm	50.00	Rmt	165.00	8,250.00

	b) 20mm	50.00	Rmt	183.00	9,150.00
	c) 25mm	50.00	Rmt	221.00	11,050.00
	d) 32mm	50.00	Rmt	244.00	12,200.00
	e) 40mm	50.00	Rmt	321.00	16,050.00
	f) 50mm	50.00	Rmt	356.00	17,800.00
101	**R3-HE-7-4**				
	The transfer of existing service connections include cutting the existing connections, plugging the holes, supplying & fixing new Gun metal				
	(a) 15 mm	10.00	Each	3304.00	33,040.00
	(b) 20 mm	10.00	Each	3476.00	34,760.00
	(c) 25 mm	10.00	Each	3773.00	37,730.00
	(d) 32 mm	10.00	Each	5015.00	50,150.00
	(e) 40 mm	10.00	Each	5664.00	56,640.00
	(f) 50 mm	10.00	Each	6886.00	68,860.00
102	**R3-HE-7-5**				
	Providing and fixing C class (heavy) GI union couplings with embossed ISI markincluding cutting and threading of pipe of following diameters etc complete in all respect as directed by Engineer in				
	(a) 15 mm	20.00	Each	191.00	3,820.00
	(b) 20 mm	20.00	Each	198.00	3,960.00
	(c) 25 mm	20.00	Each	211.00	4,220.00
	(d) 32 mm	20.00	Each	237.00	4,740.00
	(e) 40 mm	20.00	Each	250.00	5,000.00
	(f) 50 mm	20.00	Each	293.00	5,860.00

103	**R3-HE-7-7**				
	Providing and fixing GI double barrel nipples with embossed ISI mark of following diameters (C class/heavy) etc complete in all respect as directed by				
	(a) 15 mm	20.00	Each	53.00	1,060.00
	(b) 20 mm	20.00	Each	62.00	1,240.00
	(c) 25 mm	20.00	Each	74.00	1,480.00
	(d) 32 mm	20.00	Each	91.00	1,820.00
	(e) 40 mm	20.00	Each	113.00	2,260.00
	(f) 50 mm	20.00	Each	119.00	2,380.00
104	**R3-HE-7-9**				
	Providing and fixing GI couplings (heavy) with embossed ISI mark of following diameters etc complete in all respect etc complete in all respect as directed by Engineer in Charge.				
	(a) 15 mm	20.00	Each	58.00	1,160.00
	(b) 20 mm	20.00	Each	72.00	1,440.00
	(c) 25 mm	20.00	Each	88.00	1,760.00
	(d) 32 mm	20.00	Each	115.00	2,300.00
	(e) 40 mm	20.00	Each	143.00	2,860.00
	(f) 50 mm	20.00	Each	176.00	3,520.00
105	**R3-HE-7-11**				
	Providing and fixing GI plugs (heavy) of diameters etc complete in all respect etc complete in all respect as directed by Engineer in Charge.				
	a) 15mm	20.00	Each	51.00	1,020.00
	b) 20mm	20.00	Each	61.00	1,220.00
	c) 25mm	20.00	Each	73.00	1,460.00

	d) 32mm	20.00	Each	97.00	1,940.00
	e) 40mm	20.00	Each	122.00	2,440.00
	f) 50mm	20.00	Each	135.00	2,700.00
106	**R3-HE-7-13**				
	Providing and fixing GI elbows (heavy) with embossed ISI mark of following diameters etc complete in all respect etc complete as directed by Engineer in Charge.				
	(a) 15 mm	20.00	Each	62.00	1,240.00
	(b) 20 mm	20.00	Each	76.00	1,520.00
	(c) 25 mm	20.00	Each	101.00	2,020.00
	(d) 32 mm	20.00	Each	133.00	2,660.00
	(e) 40 mm	20.00	Each	167.00	3,340.00
	(f) 50 mm	20.00	Each	210.00	4,200.00
107	**R3-HE-7-15**				
	Providing and fixing GI bends (heavy) of 15mm diameters etc complete in all respect etccomplete in all respect etc complete as directedby Engineer in				
	(a) 15 mm	22.00	Each	69.00	1,518.00
	(b) 20 mm	20.00	Each	81.00	1,620.00
	(c) 25 mm	20.00	Each	105.00	2,100.00
	(d) 32 mm	20.00	Each	138.00	2,760.00
	(e) 40 mm	20.00	Each	174.00	3,480.00
	(f) 50 mm	20.00	Each	264.00	5,280.00

108	**R3-HE-7-17**				
	Providing and fixing GI reducing Tees (heavy) with embossed ISI mark of sizes etc complete in all respect etc complete in all respect as directed by Engineer in Charge. Note : Only MCGM approved GI pipe brands shall be used.				
	a) 50mm x 15mm	20.00	Each	114.00	2,280.00
	b) 50mm x 20mm	20.00	Each	130.00	2,600.00
	c) 50mm x 25mm	20.00	Each	143.00	2,860.00
	d) 50mm x 32mm	18.00	Each	165.00	2,970.00
	e) 50mm x 40mm	18.00	Each	158.00	2,844.00
109	**R3-SWD-129**				
	Shifting & reconstructing single water entrance in BM 1:4, 12 mm thick internal plaster in C.M. 1:2, utilising existing frame, gratings, R.C.C. runners, beams, purdis and dhapas (without	10.00	Each	14310.00	143,100.00
110	**R3-SWD-130**				
	Demolishing existing single or double water entrances, including cutting down of old brick masonry and concrete, removing of all serviceable material such as grating, runner beams, purdis etc.and handing over the same to nearest Municipal depot etc.complete as directed by Engineer-in- Charge..	5.00	Each	1084.00	5,420.00
111	**R3-SWD-141**				

	Constructing double water entrance of internal size 0.60m x 1.20m with cast-in-situ coping in M-20 grade, fixing gratings in M -20 as per standard drawings (Dwg No.	5.00	Each	16116.00	80,580.00
112	**R3-SWD-142**				
	Constructing single water entrance of internal size 0.50m x 0.60m with cast-in-situ coping in M-20 grade, fixing of grating in M -20 as per standard drawings (Dwg No.	10.00	Each	10918.00	109,180.00
113	**R3-SWD-143**				
	Constructing single water entrance of internal size 0.45m x 0.45m with cast-in-situ coping in M-20 grade, fixing of grating in M -20 as per standard drawings (Dwg No.	5.00	Each	9905.00	49,525.00
114	**R3-SWD-148**				
	Supplying and fixing 0.90m x 0.60m internal size of rectangular C.I. air-tight cover and frame etc. as per item.	5.00	Each	33841.00	169,205.00
115	**R3-SWD-168**				
	Providing & Fixing 0.45m X 0.45m clear internal size of M.S. Galvanised hinged type grating and frame (weighing minimum 53 kg) with minimum 75 microns zinc coating by hot	5.00	Each	9019.00	45,095.00
116	**R3-SWD-169**				
	Providing & Fixing 0.60m X 0.50m clear internal size of M.S. Galvanised hinged type grating and frame (weighing minimum 71 kg)	5.00	Each	11934.00	59,670.00
117	**R3-SWD-176-A**				

	Providing & Fixing 1.20m X 0.60m clear internal size of M.S. Galvanised hinged type grating and frame (weighing minimum 130 kg) of grade HD20, with minimum 75 microns zinc	5.00	Each	20958.00	104,790.00
				Total	**166,611,370.10**
				Say	**166,611,400.00**

SEWW(CONST)CITY AEWW(CONST)CITY EEWW(CONST)CITY

This page is intentionally kept Blank

SECTION 9

GENERAL CONDITIONS OF CONTRACT

This page is intentionally kept Blank

General Conditions of Contract

A. General

1. Definitions

1.1. Terms which are defined in the Contract Data are not also defined in the Conditions of Contract but keep their defined meanings. Capital initials are used to identify defined terms.

The "Contract" shall mean the tender and acceptance thereof and the formal agreement if any, executed between the Contractor, Commissioner and the Corporation together with the documents referred to therein including these conditions and appendices and any special conditions, the specifications, designs, drawings, price schedules, bills of quantities and schedule of rates. All these documents taken together shall be deemed to form one Contract and shall be complementary to one another.

The Contract Data defines the documents and other information which comprise the Contract.

The "Contractor" shall mean the individual or firm or company whether incorporated or not, whose tender has been accepted by the employer and the legal successor of the individual or firm or company, but not (except with the consent of the Employer) any assignee of such person.

The Bidder is a person or corporate body who has desired to submit Bid to carry out the Works, including routine maintenance till the tender process is concluded.

The Contractor's Bid is the completed bidding document submitted by the Contractor to the Employer.

The "Contract Sum" means the sum named in the letter of acceptance including Physical contingencies subject to such addition thereto or deduction there-from as may be made under the provisions hereinafter contained.

Note : The contract sum shall include the following –

- In the case of percentage rate contracts the estimated value of works as mentioned in the tender adjusted by the Contractor's percentage.
- In the case of item rate contracts, the cost of the work arrived at after finalisation of the quantities shown in schedule of items / quantities by the item rates quoted by the tenderers for various items and summation of the extended cost of each item.
- In case of lumpsum contract, the sum for which tender is accepted.
- Special discount / rebate / trade discount offered by the tenderer if any and accepted by the Corporation.

- Additions or deletions that are accepted after opening of the tenders.

The "Contract Cost" means the Contract Sum plus Price Variation. This cost shall be included in the letter of acceptance.

A Defect is any part of the Works not completed in accordance with the Contract.

The Defects Liability Certificate is the certificate issued by the Engineer, after the Defect Liability Period has ended and upon correction of Defects by the Contractor.

Drawings means all the drawings, calculations and technical information of a like nature provided by the Engineer to the Contractor under the Contract and all drawings, calculations, samples, patterns, models, operation & maintenance manual and other technical information of like nature submitted by the Contractor and approved by the Engineer.

The Authority shall mean Brihanmumbai Municipal Corporation(BMC)

The "Employer" shall mean the Brihanmumbai Municipal Corporation (BMC) / Municipal Commissioner for Greater Mumbai, for the time being holding the said office and also his successors and shall also include all "Additional Municipal Commissioners, Director (Engineering Services & Projects)" and the Deputy Municipal Commissioner, to whom the powers of Municipal Commissioner, have been deputed under Section 56 and 56B of the Mumbai Municipal Corporation Act.

The Engineer in-charge shall mean the Executive Engineer in executive charge of the works and shall include the superior officers of the Engineering department i.e. Dy.Ch.Eng/Ch.Eng. and shall mean and include all the successors in BMC

The Engineer's Representative shall mean the Assistant Engineer, Sub. Engineer/Jr. Engineer in direct charge of the works and shall include Sub Eng./ Jr. Eng of Civil section/ Mechanical section/ Electrical section appointed by BMC.

The "Engineer" shall mean the City Engineer / the Hydraulic Engineer / the Chief Engineer / the Special Engineer, appointed for the time being or any other officer or officers of the Municipal Corporation who may be authorized by the commissioner to carry out the functions of the City Engineer / the Hydraulic Engineer / the Chief Engineer / the Special Engineer or any other competent person appointed by the employer and notified in writing to the Contractor to act in replacement of the Engineer from time to time.

Contractor's Equipment means all appliances and things of whatsoever nature required for the execution and completions of the Works and the remedying of any defects therein, but does not include plant material or other things intended to form or forming part of the Permanent Works.

The Initial Contract Price is the Contract Price listed in the Employer's Letter of Acceptance.

The Intended Completion Date is the date on which it is intended that the Contractor shall complete the construction works. The Intended Completion Date is specified in the Contract Data. The Intended Completion Date may be revised only by the Engineer by issuing an extension of time.

Materials are all supplies, including consumables, used by the Contractor for incorporation in the Works and works of routine maintenance.

Plant is any integral part of the Works that shall have a mechanical, electrical, electronic, chemical, or biological function.

Routine Maintenance is the maintenance of activities of the competed structure for five years as specified in the Contract Data.

The "Site" shall mean the land and other places including water bodies more specifically mentioned in the special conditions of the tender, on, under in or through which the permanent works or temporary works are to be executed and any other lands and places provided by the Municipal Corporation for working space or any other purpose as may be specifically designated in the contract as forming part of the site.

Site Investigation Reports are those that were included in the bidding documents and are reports about the surface and subsurface conditions at the Site.

"Specification" shall mean the specification referred to in the tender and any modification thereof or addition or deduction thereto as may from time to time be furnished or approved in writing by the Engineer.

The Start Date/Commencement Date is given in the Contract Data. It is the date when the Contractor shall commence execution of the Works. It does not necessarily coincide with any of the Site Possession Dates.

A Nominated Sub-Contractor is a person or corporate body who has a Contract with the Contractor to carry out a part of the construction work and/or routine maintenance in the Contract, which includes work on the Site.

Temporary Works are works designed, constructed, installed, and removed by the Contractor that are needed for construction or installation of the Works.

Variation means a change to the:-

i) Specification and /or Drawings (if any) which is instructed by the Employer.

ii) Scope in the Contract which is instructed by the Employer.

iii) Price in the Contract which is instructed by the Employer.

The Works, as defined in the Contract Data, are what the Contract requires the Contractor to construct, install, maintain, and turn over to the Employer. Routine maintenance is defined separately.

Jurisdiction: In case of any claim, dispute or difference arising in respect of a contract, the cause of action thereof shall be deemed to have arisen in Mumbai and all legal proceedings in respect of any claim, dispute or difference shall be instituted in a competent court in the City of Mumbai only.

2. Interpretation

2.1. In interpreting these Conditions of Contract, singular also means plural, male also means female or neuter, and the other way around. Headings have no significance. Words have their normal meaning under the language of the Contract unless specifically defined. The Engineer will provide instructions clarifying queries about these Conditions of Contract.

2.2. If sectional completion is specified in the Contract Data, references in the Conditions of Contract to the Works, the Completion Date, and the Intended Completion Date apply to any Section of the Works (other than references to the Completion Date and Intended Completion Date for the whole of the Works).

2.3. The documents forming the Contract shall be interpreted in the following documents: (1) Agreement, (2) Letter of Acceptance, (3) Notice to Proceed with the Work , (4) Contractor's Bid, (5) Contract Data, (6) Special Conditions of Contract Part (7) General Conditions of Contract Part I, (8) Specifications, (9) Drawings, (10) Bill of Quantities, and (11) Any other document listed in the Contract Data.

3. Engineer's Decisions

3.1. Except where otherwise specifically stated, the Engineer will decide contractual matters between the Employer and the Contractor in the role representing the Employer. However, if the Engineer is required under the rules and regulations and orders of the Employer to obtain prior approval of some other authorities for specific actions, he will so obtain the approval, before communicating his decision to the Contractor.

3.2. Except as expressly stated in the Contract, the Engineer shall not have any authority to relieve the Contractor of any of his obligations under the contract.

4. Delegation

4.1. The Engineer, with the approval of the Employer, may delegate any of his duties and responsibilities to other person(s), except to the Adjudicator, after notifying the Contractor, and may cancel any delegation after notifying the Contractor.

5. Communications

All certificates, notices or instructions to be given to the Contractor by Employer/ Engineer shall be sent on the address or contact details given by the Contractor of Bid. The address and contact details for communication with the Employer/ Engineer shall be as per the details given in Contract Data. Communications between parties that are referred to in the conditions shall be in writing. The Notice sent by facsimile (fax) or other electronic means shall be effective on confirmation of the transmission.

The Notice sent by Registered post or Speed post shall be effective on delivery or at the expiry of the normal delivery period as undertaken by the postal service.

6. Subcontracting

6.1. Unless specifically mentioned in the contract subletting will not be allowed. Subletting, where otherwise provided by the contract shall not be more than 25% of the contract price. The subletting is allowed with the approval of Hydraulic Engineer.

6.2. The Contractor shall not be required to obtain any consent from the Employer for:

a. The sub-contracting of any part of the Works for which the Subcontractor is named in the Contract;

b. The provision for labour, or labour component.

c. The purchase of Materials which are in accordance with the standards specified in the Contract.

6.3. Beyond what has been stated in clauses 6.1 and 6.2, if the Contractor proposes sub contracting any part of the work during execution of the Works, because of some unforeseen circumstances to enable him to complete the Works as per terms of the Contract, the Employer will consider the following before according approval:

a. The Contractor shall not sub-contract the whole of the Works.

b. The permitted subletting of work by the Contractor shall not establish any contractual relationship between the sub-contractor and the BMC and shall not relieve the Contractor of any responsibility under the Contract.

6.4. The Engineer should satisfy himself before recommending to the Employer whether

a. The circumstances warrant such sub-contracting; and

b. The sub-Contractor so proposed for the Work possesses the experience, qualifications and equipment necessary for the job proposed to be entrusted to him.

7. Other Contractors

7.1. The Contractor shall cooperate and share the Site with other Contractors, public authorities, utilities, and the Employer between the dates given in the Schedule of Other Contractors, as referred to in the Contract Data. The Contractor shall also provide facilities and services for them as described in the Schedule. The Employer may modify the Schedule of Other Contractors, and shall notify the Contractor of any such modification.

7.2. The Contractor should take up the works in convenient reaches as decided by the Engineer to ensure there is least hindrance to the smooth flow and safety of traffic including movement of vehicles and equipment of other Contractors till the completion of the Works.

8. Personnel

8.1. The Contractor shall employ for the construction work and routine maintenance the key personnel including technical personnel named in the Contract Data or other personnel approved by the Engineer. The Engineer will approve any proposed replacement of technical personnel only if their

relevant qualifications and abilities are substantially equal to those of the personnel stated in the Contract Data.

8.2. The Contractor's personnel shall appropriately be qualified, skilled and experienced in their respective trades or occupations. The Engineer shall have authority to remove, or cause to be removed, any person employed on the site or works, who carries out duties incompetently or negligently and persists in any conduct which is prejudicial to safety, health or the protection of the environment.

8.3. If the Engineer asks the Contractor to remove a person who is a member of the Contractor's staff or work force, stating the reasons, the Contractor shall ensure that the person leaves the Site within seven days and has no further connection with the Works in the Contract.

8.4. The Contractor shall not employ any retired Gazetted officer who has worked in the Engineering Department of the BMC /State Government and has either not completed two years after the date of retirement or has not obtained BMC/State Government's permission to employment with the Contractor.

9. Employer's and Contractor's Risks

9.1. The Employer carries the risks which this Contract states are Employer's risks, and the Contractor carries the risks which this Contract states are Contractor's risks.

10. Employer's Risks

10.1. The Employer is responsible for the excepted risks which are (a) in so far as they directly affect the execution of the Works in the Employer's country, the risks of war, invasion, act of foreign enemies, rebellion, revolution, insurrection or military or usurped power, civil war, riot, commotion or disorder (unless restricted to the Contractor's employees) and contamination from any nuclear fuel or nuclear waste or radioactive toxic explosive, or (b) a cause due solely to the design of the Works, other than the Contractor's design.

11. Contractor's Risks

11.1. All risks of loss of or damage to physical property and of personal injury and death which arise during and in consequence of the performance of the Contract other than the excepted risks, referred to in clause 11.1, are the responsibility of the Contractor.

12. Insurance

12.1. The Contractor at his cost shall provide, in the joint names of the Employer and the Contractor, insurance cover from the Start Date to the end of Defects Liability Period, in the amounts and deductibles stated in the Contract Data for the following events which are due to the Contractor's risks:

a) Loss of or damage to the Works, Plant and Materials;

b) Loss of or damage to Equipment;

c) Loss of or damage to property (other than the Works, Plant, Materials, and Equipment) in connection with the Contract; and

d) Personal injury or death.

12.2. Insurance policies and certificates for insurance shall be delivered by the Contractor to the Engineer for the Engineer's approval before the Start Date. All such insurance shall provide for compensation to be payable in the types and proportions of currencies required to rectify the loss or damage incurred.

12.3. Alterations to the terms of insurance shall not be made without the approval of the Engineer.

12.4. Both parties shall comply with any conditions of the insurance policies.

12.5. If the Contractor does not provide any of the policies and certificates required, the Employer may affect the insurance which the Contractor should have provided and recover the premiums the Employer has paid, from payments otherwise due to the Contractor or if no payment is due, the payment of premiums shall be debt due.

13. Site Investigation Reports

13.1. The Contractor, in preparing the Bid, may rely, at his own risk, on any Site Investigation Reports referred to in the Contract Data, supplemented by any other information available to him, before submitting the bid.

14. Queries about the Contract Data

14.1. The Engineer will clarify queries on the Contract Data.

15. Contractor to Construct the Works and Undertake Maintenance (if specified in the tender)

15.1. The Contractor shall construct, and install and maintain the Works in accordance with the Specifications and Drawings and as per instructions of the Engineer.

15.2. The Contractor shall construct the works with intermediate technology, i.e., by manual means with medium input of machinery required to ensure the quality of works as per specifications. The Contractor shall deploy the equipment and machinery as required in the contract.

15.3. The Contractor shall take all reasonable steps to protect the environment on and off the Site and to avoid damage or nuisance to persons or to property of the public or others resulting from pollution, noise or other causes arising as a consequence of his methods of operation.

During continuance of the contract, the Contractor and his sub-contractors shall abide at all times by all existing enactments on environmental protection and rules made there under, regulations, notifications and byelaws of the State or Central Government, or local authorities and any other law, bye-law, regulations that may be passed or notification that may be issued in future by the State or Central Government or the local authority. Salient features of some of the major laws that are applicable are given below:

- The Water (Prevention and Control of Pollution) Act, 1974, this provides for the prevention and control of water pollution and the maintaining and restoring of wholesomeness of water. 'Pollution' means such contamination of water or such alteration of the physical, chemical or biological properties of water or such discharge of any sewage or trade effluent or of any other liquid, gaseous or solid substance into water (whether directly or indirectly) as may, or is likely to, create a nuisance or render such water harmful or injurious to public health or safety, or to domestic, commercial, industrial, agricultural or other legitimate uses, or to the life and health of animals or plants or of aquatic organisms.
  - The Air (Prevention and Control of Pollution) Act, 1981, this provides for prevention, control and abatement of air pollution. 'Air Pollution' means the presence in the atmosphere of any 'air pollutant', which means any solid, liquid or gaseous substance (including noise) present in the atmosphere in such concentration as may be or tend to be injurious to human beings or other living creatures or plants or property or environment.
- The Environment (Protection) Act, 1986, this provides for the protection and improvement of environment and for matters connected therewith, and the prevention of hazards to human beings, other living creatures, plants and property. 'Environment' includes water, air and land and the inter-relationship which exists among and between water, air and land, and human beings, other living creatures, plants, micro-organism and property.
- The Public Liability Insurance Act, 1991, This provides for public liability insurance for the purpose of providing immediate relief to the persons affected by accident occurring while handling hazardous substances and for matters connected herewith or incidental thereto. Hazardous substance means any substance or preparation which is defined as hazardous substance under the Environment (Protection) Act 1986, and exceeding such quantity as may be specified by notification by the Central Government.

16. The Works and Routine Maintenance to be completed by the Intended Completion Date

16.1. The Contractor may commence execution of the Works on the Start Date and shall carry out the Works and Routine Maintenance, if specified in the tender, in accordance with the program submitted by the Contractor, as updated with the approval of the Engineer, and complete them by the Intended Completion Date.

17. Approval by the Engineer

17.1. The Contractor shall submit Specifications and Drawings showing the proposed Temporary Works to the Engineer, who is to approve them if they comply with the Specifications and Drawings.

17.2. The Contractor shall be responsible for design and safety of Temporary Works.

17.3. The Engineer's approval shall not alter the Contractor's responsibility for design and safety of the Temporary Works.

17.4. The Contractor shall obtain approval of third parties to the design of the Temporary Works, where required.

17.5. All Drawings prepared by the Contractor for the execution of the temporary or permanent Works, are subject to prior approval by the Engineer before their use.

18. Safety

18.1. The Contractor shall be responsible for the safety of all activities on the Site. He shall comply with all applicable safety requirements and take care of safety of all persons entitled to be on the site and the works. He shall use reasonable efforts to keep the site and the works, both during construction and maintenance, clear of unnecessary obstruction so as to avoid danger to the persons and the users.

- Workers employed on mixing asphaltic materials, cement and lime mortars shall be provided with protective footwear and protective goggles.
- Stone breaker shall be provided with protective goggles and protective clothing and seated at sufficiently safe intervals.
- The area should be barricaded or cordoned off by suitable means to avoid mishaps of any kind. Power warning signs should be displayed for the safety of the public whenever cleaning works are undertaken during night or day.
- The workers engaged for cleaning the manholes/sewers should be properly trained before allowing working in the manhole.

18.2. **Safety Programs:-**

I. Have adequate safety supervision in place to ensure that safety programs set up by the firms/agencies are in compliance with prevalent laws and regulations.

II. Review safety programs developed by each of the trade firms, prepare and submit a comprehensive safety program.

III. Monitor day to day implementation of safety procedures.

18.3. **First Aid Facilities: -**

IV. At every work place there shall be provided and maintained, so as to be easily accessible during working hours, first-aid boxes at the rate of not less than one box for 150 contract labour or part thereof ordinarily employed.

i. The first-aid box shall be distinctly marked with a red cross on white back ground.

ii. Adequate arrangements shall be made for immediate recoupment of the equipment when necessary.

iii. Nothing except the prescribed contents shall be kept in the First-aid box.

iv. The first-aid box shall be kept in charge of a responsible person who shall always be readily available during the working hours of the work place.

v. A person in charge of the First-aid box shall be a person trained in First-aid treatment, in the work places where the number of contract labour employed is 150 or more.

19. Discoveries

19.1. Anything of historical or other interest or of significant value unexpectedly discovered on the Site shall be the property of the Employer. The Contractor shall notify the Engineer of such discoveries and carry out the Engineer's instructions for dealing with them.

20. Possession of the Site

20.1. The Employer shall handover complete or part possession of the site to the Contractor 7 days in advance of construction program. At the start of the work, the Employer shall handover the possession of at-least 75% of the site free of all encumbrances, the remaining 25 % of the possession as per contractor's construction program.

21. Access to the Site

21.1. The Contractor shall allow access to the Site and to any place where work in connection with the Contract is being carried out, or is intended to be carried out to the Engineer and any person/persons/agency authorized by: a. The Engineer b. The Employer or authorized by the Employer.

22. Instructions

22.1. The Contractor shall carry out all instructions of the Engineer, which comply with the applicable laws where the Site is located.

22.2. The Contractor shall permit the appointed and/or authorized persons to inspect the Site and/or accounts and records of the Contractor and its subcontractors relating to the performance of the Contract, and to have such accounts and records audited by auditors appointed, if so required. The Contractor's attention is invited to Clause of 'Fraud and Corruption', which provides, inter alia, that acts intended to materially impede the exercise of the inspection and audit rights provided for under the Clause & constitute a obstructive practice subject to contract termination.

22.3. Engineer to have power to issue further drawings or instructions:

- The Engineer shall have the power and authority from time to time and at all times to make and issue such further drawings and to give such further instructions and directions as may appear to him necessary or proper for the guidance of the contractor and the good and sufficient execution of the works according to terms of the specifications and Contractor shall receive, execute, obey and be bound by the same, according to the true intent and meaning thereof, as fully and

effectually as though the same had accompanied or had been mentioned or referred to in the specification, and the Engineer may also alter or vary the levels or position of nature of works contemplated by the specifications, or may order any of the works contemplated thereby to be omitted, with or without the substitution of any other works in lieu thereof, or may order any work or any portion of work executed or partially executed, to be removed, changed or altered, added if needful, may order that other works shall be substituted instead thereof and difference of expense occasioned by any such diminution or alteration so ordered and directed shall be added to or deducted from the amount of this Contract, as provided under condition no.10(a) hereinafter.

- No work which radically changes the original nature of the Contract shall be ordered by the Engineer and in the event of any deviation being ordered which in the opinion of the Contractor changes the original nature of Contract he shall nevertheless carry it out and disagreement as to the nature of the work and the rate to be paid therefore shall be resolved in accordance with condition no.13d.
- The time for completion of the Works, shall be in even of any deviations resulting in additional cost over the contract price being ordered, be extended or reduced reasonably by the Engineer. The Engineer's decision in this case shall be final.

B. Time Control

23. Programme

23.1. Within the time stated in the Contract Data, the Contractor shall submit to the Engineer for approval a Program, including Environment Management Plan showing the general methods, arrangements, order, and timing for all the activities in the Works, along with monthly cash flow forecasts for the construction of works.

After the completion of the construction works, the program for the Routine Maintenance Work, showing the general methods, arrangements, order and timing for all the activities involved in the Routine Maintenance will also be submitted by the Contractor to the Engineer for approval if specified in the tender. The program for Routine Maintenance will be submitted in each year for the period of Maintenance.

23.2. The Contractor shall submit the list of equipment and machinery being brought to site, the list of key personnel being deployed, the list of machinery/ equipments being placed in field laboratory and the location of field laboratory along with the Programme. The Engineer shall cause these details to be verified at each appropriate stage of the programme.

23.3. An update of the Programme shall be a programme showing the actual progress achieved on each activity and the effect of the progress achieved on the timing of the remaining Works, including any changes to the sequence of the activities.

23.4. The Contractor shall submit to the Engineer for approval an updated Programme at intervals no longer than the period stated in the Contract Data. If the Contractor does not submit an updated Programme within this period, the Engineer may withhold the amount stated in the Contract Data from the next payment certificate and continue to withhold this amount until the next payment after the date on which the overdue Programme has been submitted.

23.5. The Engineer's approval of the Programme shall not alter the Contractor's obligations. The Contractor may revise the Programme and submit it to the Engineer again at any time. A revised Programme shall show the effect of Variations and Compensation Events.

24. Extension Of Time In Contracts :

Subject to any requirement in the contract as to completion of any portions or portions of the works before completion of the whole, the contractor shall fully and finally complete the whole of the works comprised in the contract (with such modifications as may be directed under conditions of this contract) by the date entered in the contract or extended date in terms of the following clauses:

a) Extension attributable to BMC

(i) **Extension Due To Modification**: If any modifications have been ordered which in the opinion of the Engineer have materially increased the magnitude of the work, then such extension of the contracted date of completion may be granted as shall appear to the Engineer to be reasonable in the circumstances, provided moreover that the Contractor shall be responsible for requesting such extension of the date as may be considered necessary as soon as the cause thereof shall arise and in any case **should not be less than 30 days before the expiry of the date fixed for completion of the works.**

(ii) **Extension For Delay Due To BMC**: In the event of any failure or delay by the BMC to hand over the Contractor possession of the lands necessary for the execution of the works or to give the necessary notice to commence the works or to provide the necessary drawings or instructions or any other delay caused by the BMC due to any other cause whatsoever, then such failure or delay shall in no way affect or vitiate the contract or alter the character thereof or entitle the contractor to damages or compensation therefore, but in any such case, the BMC may grant such extension(s) of the completion date as may be considered reasonable.

Note: For extension of time period as governed in (i) and (ii) above, any modifications in design/drawings, specifications, quantities shall be needed to be justified with recorded reasons with approval of Ch.Eng. for not anticipating the same while preparing estimates and draft tender.

b) **Extension of Time for Delay Due To Contractor**: The time for the execution of the work or part of the works specified in the contract documents shall be deemed to be the essence of the contract and the works must be completed no later than the date(s) / the programme for completion of work as specified in the contract. If the contractor fails to complete the works within the time as specified in the contract for the reasons other than the reasons specified in above as (a.i) and (a.ii), the BMC may, if satisfied that the works can be completed by the contractor within reasonable short time thereafter, allow the contractor for further extension of time as the Engineer may decide. On such extension the BMC will be entitled without prejudice to any other right and remedy available on that behalf, to recover the compensation as governed by Clause 8(e) of GCC.

For the purpose of this Clause, the contract value of the works shall be taken as value of work as per contract agreement including any supplementary work order/contract agreement issued.

Further, competent authority while granting extension to the currency of contract under Clause (b) of as above may also consider levy of penalty, as deemed fit based on the merit of the case. Also, the reasons for granting extension shall be properly documented.

25. Delays Ordered by the Engineer

25.1 The Engineer may instruct the Contractor to delay the start or progress of any activitywithin the Works. Delay/delays totaling more than 30 days will require prior written approval of the DMC/AMC.

26. Management Meetings

26.1 The Engineer may require the Contractor to attend a management meeting. The business of a management meeting shall be to review the plans for progress of the Works.

26.2 The Engineer shall record the business of management meetings and provide copies of the record to those attending the meeting. The responsibility of the parties for actions to be taken shall be decided by the Engineer either at the management meeting or after the management meeting and stated in writing to all those who attended the meeting.

C.Quality Control

27.1 **Work to be open to Inspection and Contractor or Responsible agent to be present**

All works under or in course of execution or executed in pursuance of the contract shall at all times be open to the inspection and supervision of the Eng-in-charge and his subordinates and the

contractor shall at all times during the usual working hours, at all other times, during the usual working hours and at all other times at which reasonable notice of the intention of the Eng-in-charge and his subordinates to visit the works shall have been given to the contractor, either himself be present to receive orders and instruction or have responsible agent duly accredited in writing present for that purpose. Order given to the contractors' duly authorized agent shall be considered to have the same force and effect as if they had been given to the contractor himself.

27.2 **NoticeTo Be Given Before Work Is Covered Up**

The contractor shall givenot less than ten days' notice in writing to the Eng-In-Charge or his subordinate incharge of the work before covering up or otherwise placing beyond the reach of measurement any work in order that the same may be measured and correct dimension thereof taken before the same is so covered up or placed beyond the reach of measurements and shall not cover up or place beyond the reach of measurement any work without the consent in writing of the Eng-In-Charge or his subordinate incharge of the work, and if any work shall be covered up or placed beyond the reach of measurement, without such notice having been given or consent obtained the same shall be uncovered at the contractors expenses, and in default thereof no payment or allowance shall be made for such work or for the materials with which the same was executed

27.3 **Works to be executed in accordance with specifications / drawings / orders etc. :**

The contractor shall execute the whole and every part of the work the most substantial and workman like manner and both has regards material and every other respect in strict accordance with specifications. The contractor shall also confirm exactly, fully and faithfully to the designs, drawings and instructions in writing relating to the work signed by the Engineer In-charge and lodged in his office and to which the contractor shall be entitled to have access for the purpose of inspection at such office, or on the site or work during office hours. The contractor shall be entitled to receive three sets of contract drawings and working drawings as well as one certified copy of the accepted tender along with the work order free of cost.

27.4 **Ready Mix Concrete/ Asphalt Mix**

i. The contractor shall have to arrange Ready Mix concrete (RMC)/Asphalt from RMC/ASPHALT producing plants registered with BMC

ii. The contractor shall, within 7 days of award of the work, submit a list of at least three RMC/Asphalt producers with details of such plants including details and number of transit, mixers & pumps etc. to be deployed indicating name of owner/company, its location, capacity, technical establishment.

The Engineer-in-charge will reserve right to inspect at any stage and reject the concrete if he is not satisfied about quality of product at the user's end.

iii. The Engineer-in-charge reserves the right to exercise control over the:-

a. Calibration check of the RMC/Asphalt plant.

b. Weight and quantity check on the ingredients, water and admixtures added for batch mixing for RMC plants

c. Time of mixing of concrete/grade of asphalt.

d. Testing of fresh concrete/asphalt mix, recording of results and declaring the mix fit or unfit for use. This will include continuous control on the work ability during production and taking corrective action, if required.

e. For exercising such control, the Engineer-in-charge shall periodically depute his authorized representative at the RMC/Asphalt plant. It shall be responsibility of the contractor to ensure that all necessary equipment, manpower & facilities are made available to Engineer-in-charge and or his authorized representative at RMC/Asphalt plant.

f. All required relevant records of RMC/Asphalt mix shall be made available to the Engineer-in-charge or his authorized representative. Engineer-in-charge shall, as required, specify guidelines & additional procedures for quality control & other parameters in respect of material production& transportation of concrete mix which shall be binding on the contractor & the RMC/Asphalt plant. Only concrete as approved in design mix by Engineer-in-charge shall be produced in RMC plant and transported to the site.

g. The contactor shall have to produce a copy of chalan receipts/SCADA reports/VTS reports as issued by the RMC/Asphalt plant as a documentary proof in lieu of supply of RMC/Asphalt mix before releasing payment.

28 Identifying Defects

28.1 The Engineer shall check the Contractor's work and notify the Contractor of any Defects that are found. Such checking shall not affect the Contractor's responsibilities. The Engineer may instruct the Contractor to search for a Defect and to uncover and test any work that the Engineer considers may have a Defect.

28.2 The Contractor shall permit the Employer's technical person(s) to check the Contractor's work and notify the Engineer and Contractor if any defects that are found.

29 Tests

29.1 For carrying out mandatory tests as prescribed in the specifications, the Contractor shall establish field laboratory at the location decided by Engineer. The field laboratory will have minimum of equipments as specified in the Contract Data. The contractor shall be solely responsible for:

a. Carrying out the mandatory tests prescribed in the Specifications, and

b. For the correctness of the test results, whether preformed in his laboratory or elsewhere.

29.2 If the Engineer instructs the Contractor to carry out a test not specified in the Specification/ Quality Assurance Handbook to check whether any work has a Defect and the test shows that it does, the Contractor shall pay for the test and any samples. If there is no defect, the test shall be a compensation event.

When required by the Engineer-in-charge the contractor(s) shall supply for the purpose of testing samples of all materials proposed to be used in the works. Samples submitted either to govern bulk supplies or required for testing before use shall be in suitable packages to contain them and shall be provided free of charge by the contractor. The cost of testing shall be borne by the contractor even if the result of the sample confirm or do not confirm to the relevant BIS code specifications.

i. All expenditure required to be incurred for taking the samples conveyance, packing shall be borne by the contactor himself.

ii. The failed material shall be removed from the site by the contractor at his own cost within a week time of written order of the Engineer-in-charge.

29.3 **Setting of Site Laboratories:**

Contractors shall set up a laboratory at site before commencement of work at their cost for performing various tests and at least the following machines and equipment's shall be provided therein –

1. Set of Sieves as per I.R.C. /I.S.
2. Compressive Testing Machine(For new works)
3. Oven, Electrically Operated
4. Weighing Balance (20 kg capacity)
5. 3 m straight edge
6. Sieve shaker
7. First Aid Box
8. Measuring Jar (for silt content)
9. Other Machines/apparatus as may be directed by the Engineer

10. Vernier Caliber
11. Level / Theodolite

All the test records shall be maintained in the site office and made available as and when required. The laboratory must be established within 15 days from the date of receipt of the orders from Engineer In charge. On failure to do so, a penalty of Rs 1000/- per day shall be imposed.

The contractor shall install testing equipment at site. The contractor shall ensure and certify the calibration of the equipment so installed and shall maintain the same in working order throughout the period of construction. The contractor shall also provide necessary technically qualified experienced trained staff for carrying out such tests for using such equipment. The tests shall be carried out under the supervision of the Engineer-in-charge. The calibration shall be checked every twelve months as directed by Engineer-in-charge.

30 Correction of Defects noticed during the Defects Liability Period.

30.1 (a) The Engineer shall give notice to the Contractor of any Defects before the end of the Defects Liability Period, which begins at Completion and ends after five years. The Defects Liability Period shall be extended for as long as Defects remain to be corrected.

(b) Every time notice of Defect/Defects is given, the Contractor shall correct the notified Defect/Defects within the duration of time specified by the Engineer's notice.

(c) The Engineer may issue notice to the Contractor to carry out removal of defects or deficiencies, if any, noticed in his inspection, or brought to his notice. The Contractor shall remove the defects and deficiencies within the period specified in the notice and submit to the Engineer a compliance report.

31. Uncorrected Defects and Deficiencies

31.1 If the Contractor has not corrected a Defect pertaining to the Defect Liability Period under clause and deficiencies in maintenance, to the satisfaction of the Engineer, within the time specified in the Engineer's notice, the Engineer will assess the cost of having the Defect or deficiency corrected, and the Contractor shall pay this amount, on correction of the Defect or deficiency by another agency.

D. Cost Control

32. Variations

The Engineer shall, having regard to the scope of the Works and the sanctioned estimated cost, have power to order, in writing, Variations within the scope of the Works he considers necessary or advisable during the progress of the Works. Such Variations shall form part of the Contract and the Contractor shall carry them out and include them in updated Programmes produced by the Contractor. Oral orders of the Engineer for Variations, unless followed by written confirmation, shall not be taken into account.

33. Payments for Variations

33.1 If rates for Variation items are specified in the Bill of Quantities, the Contractor shall carry out such work at the same rate.

33.2 The rate for Extra/Excess shall be governed by clause 10.A of Standard General Condition of Contract

34. Cash Flow Forecasts

When the Programme is updated, the Contractor shall provide the Engineer with an updated cash flow forecast.

35. Payment Certificates

The payment to the Contractor will be as follows for construction work:

(a) A bill shall be submitted by the Contractor monthly or before the date fixed by the Engineer In-charge for all works executed in the previous month, and the Engineer In-charge shall take or cause to be taken requisite measurement for the purpose of having the same verified and the claim, so far as it is admissible, shall be adjusted, if possible, within 10 days from the presentation of the bill. If the contractor does not submit the bill within the time fixed as aforesaid, the Engineer In-charge may depute a subordinate to measure up the said work in the presence of the contractor or his duly authorized agent whose counter signature to the measurement list shall be sufficient warrant, and Engineer In-Charge may prepare a bill from such list which shall be binding on the contractor in all respects.

(b) The Engineer shall check the Contractor's fortnightly/monthly statement within 14 days and certify the amount to be paid to the Contractor.

(c) The value of work executed shall be determined, based on measurements by the Engineer.

(d) The value of work executed shall comprise the value of the quantities of the items in the Bill of Quantities completed.

(e) The value of work executed shall also include the valuation of Variations and Compensation Events.

(f) The Engineer may exclude any item certified in a previous certificate or reduce the proportion of any item previously certified in any certificate in the light of later information.

(g) The contractor shall submit all bills on the printed forms at the office of Engineer In-charge. The charges to be made in the bills shall always be entered at the rates specified in tender.

36. Payments

36.1 Payments shall be adjusted for deductions for advance payments, retention, security deposit, other recoveries in terms of the Contract and taxes at source, as applicable under the law. The Employer shall pay the Contractor the amounts certified by the Engineer within 15 days of the date of each certificate.

36.2 All sums payable by a contractor by way of compensation under any of these conditions, shall be considered as a reasonable compensation to be applied to the use of BMC without reference to the actual loss or damage sustained and whether any damage has or has not been sustained.

36.3 No payment shall be made for any work estimated to cost less than Rupees One Thousand till after the whole of work shall have been completed and the certificate of completion given. But in the case of works estimated to cost more than Rs. One Thousand, the contractor shall on submitting a monthly bill therefore be entitled to receive payment proportionate to the part of the work than approved and passed by the Engineer In-charge, whose certificate of such approval and passing of the sum so payable shall be final and conclusive against the contractor. All such intermediate payments shall be regarded as payments by way of advance against the final payments only and not as payments for work actual done and completed and shall not preclude the Engineer In-charge from requiring any bad, unsound, imperfect or unskillful work to be removed or taken away and reconstructed or re-erected nor shall any such payment be considered as an admission of the due performance of the contract or any part thereof in any respect or the offering of any claim not shall it conclude, determine or effect in any other way, the powers of the Engineer In-charge as to the final settlement and adjustment of the accounts or otherwise, or in any other way vary or effect the contract. The final bill shall be submitted by the Contractor within one month of the date fixed for the completion of the work otherwise the Engineer In-charge's certificate of the measurements and of the total amount payable for the work shall be final and binding on all parties.

37. The Contractor shall not be entitled to compensation to the extent that the Employer's interests are adversely affected by the Contractor for not having given early warning or not having cooperated with the Engineer.

38. Tax

The tenderer shall quote inclusive of all taxes other than GST (Excluding GST), Levies, Duties, and Cess etc. as applicable at the time of bid submission. GST as applicable shall be paid separately on submission of bills/invoice.

Input Tax Credit of GST as available with the bidder will not be claimed separately by BMC. However, while quoting the rates benefit of Input Tax Credit or Exemptions shall be passed on to the BMC by way of equivalent reduction in quoted price.

39. Currencies

All payments will be made in Indian Rupees.

40. Liquidated Damages

Both, the Contractor and the Employer have agreed that it is not feasible to precisely estimate the amount of losses due to delay in completion of works and the losses to the public and the economy, therefore, both the parties have agreed that the Contractor shall pay liquidated damages to the Employer and not by way of penalty, at the rate per week or part thereof stated in the Contract Data for the period that the Completion Date is later than the Intended Completion Date. Liquidated damages at the same rates shall be withheld if the Contractor fails to achieve the milestones prescribed in the Contract Data. However, in case the Contractor achieves the next milestone, the amount of the liquidated damages already withheld shall be restored to the Contractor by adjustment in the next payment certificate. The Employer and the contractor have agreed that this is a reasonable agreed amount of liquidated damage. The Employer may deduct liquidated damages from payments due to the Contractor. Payment of liquidated damages shall not affect the Contractor's other liabilities.

41. Cost of Repairs

Loss or damage to the Works or Materials to be incorporated in the Works between the Start Date and the end of the Defects Correction periods shall be remedied by the Contractor at his cost if the loss or damage arises from the Contractor's acts or omissions.

E. Finishing the Contract

42. Completion of Construction and Maintenance

42.1 The Contractor shall request the Engineer to issue a certificate of completion of the construction of the works, and the Engineer will do so upon deciding that the works is completed. This shall be governed as per clause no.8(g) of Standard General Conditions of Contract.

43. Taking Over

43.1 The Employer shall take over the works within seven days of the Engineer issuing a certificate of completion of works. The Contractor shall continue to remain responsible for its routine maintenance during the maintenance period if specified in the contract.

44. Final Account

Final joint measurement along with the representatives of the contractor should be taken recorded and signed by the Contractors. Contractors should submit the final bill within 1 month of physical completion of the work.

If the contractor fails to submit the final bill within 1 month, the BMC staff will prepare the final

bill based on the joint measurement within next 3 months.

Engineer's decision shall be final in respect of claims for defect and pending claims against contractors.

No further claims should be made by the Contractor after submission of the final bill and these shall be deemed to have been waived and extinguished. Payment of those items of the bills in respect of which there is no dispute and of items in dispute, for quantities and rates as approved by the Commissioner shall be made within a reasonable period as may be necessary for the purpose of verification etc.

After payment of the final bill as aforesaid has been made, the contractor may, if he so desires, reconsider his position in respect of a disputed portion of the final bills and if he fails to do so within 84 days, his disputed claim shall be dealt with as provided in the contract.
A percentage of the retention money, over and above the actual retention money as indicated below shall be held back from payments till the finalization of final bill to be submitted as per above and will be paid within 30 days of acceptance of the final bill.

Sr.no.	Amount of Contract Cost	Minimum Payable Amount in final bill
1	Upto Rs.5 Crs.	Rs.10 Lacs or final bill whichever is more
2	Upto Rs.25 Crs.	Rs.1 Crore or final bill amount whichever is more
3	UptoRs. 50 Crs.	Rs.2 Crores or final bill amount whichever is more
4	Upto Rs.100 Crs.	Rs.4 Crore or final bill amount whichever is more
5	More than Rs.100 Crs..	Rs.7 Crore or final bill amount whichever is more

The contractor has to submit the bill for the work carried out within 15 days from the date of completion of the work to the respective executing department. If the contractor fails to submit their bills to concerned executing department, penalty or action as shown below will be taken for each delayed bill:-

After 15 days from the date of completion/running bill upto certain date, upto next 15 days i.e. upto 30 days	Equal to 5% of bill amount
Next 15 days upto 45 days from the date of completion/running bill upto specified date	Equal to 10% of bill amount
If not submitted within 45 days from the date of completion/ R.A. bill	Bill will not be admitted for payment.

45. Operating and Maintenance Manuals

45.1 If "as built" Drawings and/or operating and maintenance manuals are required, the Contractor shall supply them by the dates stated in the Contract Data.

45.2 If the Contractor does not supply the Drawings and/or manuals by the dates stated in the Contract Data, or they do not receive the Engineer's approval, the Engineer shall withhold the amount stated in the Contract Data from payments due to the Contractor.

46. Termination

46.1 The Employer or the Contractor may terminate the Contract if the other party causes a fundamental breach of the Contract.

46.2 Fundamental breaches of Contract shall include, but shall not be limited to, the following:

a) The Contractor stops work for 30 days when no stoppage of work is shown on the current Programme and the stoppage has not been authorized by the Engineer;

b) The Contractor is declared as bankrupt or goes into liquidation other than for approved reconstruction or amalgamation;

c) the Engineer gives Notice that failure to correct a particular Defect is a fundamental breach of Contract and the Contractor fails to correct it within a reasonable period of time determined by the Engineer;

d) The Contractor does not maintain a Security, which is required;

e) The Contractor has delayed the completion of the Works by the number of days for which the maximum amount of liquidated damages can be paid, as defined in relevant clause.

f) The Contractor fails to provide insurance cover as required under relevant clause .

g) If the Contractor, in the judgment of the Employer, has engaged in the corrupt or fraudulent practices as defined in GCC in competing for or in executing the Contract.

h) If the Contractor fails to set up a field laboratory with the prescribed equipment, within the period specified in the Contract Data; and

i)Any other fundamental breaches as specified in the Contract Data.

j) If the Contractor fails to deploy machinery and equipment or personnel as specified in the Contract Data at the appropriate time.

46.3 When either party to the contract gives notice of a breach of contract to the Engineer for a cause other than those listed above, the Engineer shall decide whether the breach is fundamental or not.

46.4 Notwithstanding the above, the Employer may terminate the Contract for convenience.

46.5 If the Contract is terminated, the Contractor shall stop work immediately, make the Site safe and secure, and leave the Site as soon as reasonably possible.

47. Payment upon Termination

47.1 If the Contract is terminated because of a fundamental breach of Contract by the Contractor, the Engineer shall issue a certificate for value of the work done and materials ordered less liquidated damages, if any, less advance payments received up to the date of the issue of the certificate and less the percentage to apply to the value of the work not completed, as indicated in the Contract Data. If the total amount due to the Employer exceeds any payment due to the Contractor, the difference shall be recovered from the security deposit, and performance security. If any amount is still left un-recovered it will be a debt due from the Contractor to the Employer

47.2 If the Contract is terminated at the Employer's convenience, the Engineer shall issue a certificate for the value of the work done, the reasonable cost of removal of Equipment, repatriation of the Contractor's personnel employed solely on the Works, and the Contractor's costs of protecting and securing the Works and less advance payments received up to the date of the certificate, less other recoveries due in terms of the Contract, and less taxes due to be deducted at source as per applicable law.

48. Property

48.1 All Materials on the Site, Plant, Equipment, Temporary Works, and Works shall be deemed to be the property of the Employer for use for completing balance construction work if the Contract is terminated because of the Contractor's default, till the Works is completed after which it will be transferred to the Contractor and credit, if any, given for its use.

49. Release from Performance

If the Contract is frustrated by the outbreak of war or by any other event entirely outside the control of the Employer or the Contractor, the Engineer shall certify that the Contract has been frustrated. The Contractor shall make the Site safe and stop work as quickly as possible after receiving this certificate and shall be paid for all work carried out before receiving it and for any work carried out afterwards to which a commitment was made.

A) Other Conditions of Contract

50. Labour

50.1 The Contractor shall, unless otherwise provided in the Contract, make his own arrangements for the engagement of all staff and labour, local or other, and for their payment, housing, feeding and transport.

50.2 The Contractor shall, if required by the Engineer, deliver to the Engineer a return in detail, in such form and at such intervals as the Engineer may prescribe, showing the staff and the number of the

several classes of labour from time to time employed by the Contractor on the Site and such other information as the Engineer may require.

51. Compliance with Labour Regulations

(a) During continuance of the Contract, the Contractor and his sub-Contractors shall abide at all times by all existing labour enactments and rules made there under, regulations, notifications and bye laws of the State or Central Government or local authority and any other labour law (including rules), regulations, bye laws that may be passed or notification that may be issued under any labour law in future either by the State or the Central Government or the local authority.

(b) Furthermore, the Contractor shall keep the Employer indemnified in case any action is taken against the Employer by the competent authority on account of contravention of any of the provisions of any Act or rules made there under, regulations or notifications including amendments. If the Employer is caused to pay or reimburse, such amounts as may be necessary to cause or observe, or for non-observance of the provisions stipulated in the notifications/bye laws/Acts/Rules/regulations including amendments, if any, on the part of the Contractor, the Engineer/Employer shall have the right to deduct any money due to the Contractor including his amount of performance guarantee. The Employer/Engineer shall also have right to recover from the Contractor any sum required or estimated to be required for making good the loss or damage suffered by the Employer.

(c) The Contractor shall require his employees to obey all applicable laws, including those concerning safety at work.

(d) The employees of the Contractor and the Sub-Contractor in no case shall be treated as the employees of the Employer at any point of time.

52. Drawings and Photographs of the Works

52.1 The Contractor shall do photography/video photography of the site firstly before the start of the work, secondly mid-way in the execution of different stages of work as required by Engineer In-charge and lastly after the completion of the work. No separate payment will be made to the Contractor for this.

52.2 The Contractor shall not disclose details of Drawings furnished to him and works on which he is engaged without the prior approval of the Engineer in writing. No photograph of the works or any part thereof or plant employed thereon, except those permitted under above clause, shall be taken or permitted by the Contractor to be taken by any of his employees or any employees of his sub-Contractors without the prior approval of the Engineer in writing. No photographs/ Video

photography shall be published or otherwise circulated without the approval of the Engineer in writing.

53. The Apprentices Act, 1961

The Contractor shall duly comply with the provisions of the Apprentices Act 1961 (III of 1961), the rules made there under and the orders that may be issued from time to time under the said Act and the said Rules and on his failure or neglect to do so, he shall be subject to all liabilities and penalties provided by the said Act and said Rules.

54 Contract Document

The documents forming the contract are to be taken as mutually explanatory of one another. Unless otherwise provided in the contract, the priority of the documents forming the contract shall be, as follows:

1) Contract Agreement (if completed)

2) The letter of Acceptance

3) The Bid:

4) Addendum to Bid; if any

5) Tender Document

6) The Bill of Quantities:

7) The Specification:

8) Detailed Engineering Drawings

9) Standard General Conditions of Contracts (GCC)

10) All correspondence documents between bidder/contractor and BMC.

55 Conflict of Interest

The Applicant shall not have a conflict of interest (the "Conflict of Interest") that affects the Bidding Process. Any Applicant found to have a Conflict of Interest shall be disqualified. An Applicant shall be deemed to have a Conflict of Interest affecting the Bidding Process, if

1. A constituent of such Applicant is also a constituent of another Applicant; or

2. Such Applicant has the same legal representative for purposes of this Application as any other Applicant; or

3. Such Applicant, or any Associate thereof has a relationship with another Applicant, or any

Associate thereof, directly or through common third party/ parties, that puts either or both of them in a position to have access to each other's information about, or to influence the Application of either or each other; or

4. The Applicant shall be liable for disqualification if any legal, financial or technical adviser of the Authority in relation to the Project is engaged by the Applicant, its Member or any Associate thereof, as the case may be, in any manner for matters related to or incidental to the Project. For the avoidance of doubt, this disqualification shall not apply where such adviser was engaged by the Applicant, its Member or Associate in the past but its assignment expired or was terminated 6 (six) months prior to the date of issue of this TENDER. Nor will this disqualification apply where such adviser is engaged after a period of 3 (three) years from the date of commercial operation of the Project.

56. Applications and costs thereof

No Applicant shall submit more than one Application for the Project. An applicant applying individually shall not be entitled to submit another application either individually.The Applicant shall be responsible for all of the costs associated with the preparation of their Applications and their participation in the Bid Process. The Authority will not be responsible or in any way liable for such costs, regardless of the conduct or outcome of the Bidding Process.

57 Acknowledgment by Applicant

It shall be deemed that by submitting the Application, the Applicant has:

a. made a complete and careful examination of the tender;
b. received all relevant information requested from the Authority;
c. accepted the risk of inadequacy, error or mistake in the information provided in the tender or furnished by or on behalf of the Authority relating to any of the matters referred; and
d. Agreed to be bound by the undertakings provided by it under and in terms hereof.

"The Authority" shall not be liable for any omission, mistake or error in respect of any of the above or on account of any matter or thing arising out of or concerning or relating to the TENDER or the Bidding Process, including any error or mistake therein or in any information or data given by the Authority.

58 Right to accept or reject any or all Applications/ Bids

Notwithstanding anything contained in this TENDER, "The Authority" reserves the right to accept or reject any Application and to annul the Bidding Process and reject all Applications/ Bids, at any time without any liability or any obligation for such acceptance, rejection or annulment, and without assigning any reasons therefore. In the event that the Authority rejects or

annuls all the Bids, it may, in its discretion, invite all eligible Bidders to submit fresh Bids hereunder.

"The Authority" reserves the right to reject any Application and/ or Bid if:

(a) at any time, a material misrepresentation is made or uncovered, or

(b) The Applicant does not provide, within the time specified by the Authority, the supplemental information sought by the Authority for evaluation of the Application.

In case it is found during the evaluation or at any time before signing of the Agreement or after its execution and during the period of subsistence thereof including the concession thereby granted by "The Authority", that one or more of the pre-qualification conditions have not been met by the Applicant, or the Applicant has made material misrepresentation or has given any materially incorrect or false information, the Applicant shall be disqualified forthwith if not yet appointed as the Successful Bidder either by issue of the LOA (Letter of Approval) or entering into of the Agreement, and if the Applicant has already been issued the LOA or has entered into the Concession Agreement, as the case may be, the same shall, notwithstanding anything to the contrary contained therein or in this TENDER, be liable to be terminated, by a communication in writing by "The Authority" to the Applicant, without the Authority being liable in any manner whatsoever to the Applicant and without prejudice to any other right or remedy which the Authority may have under this TENDER, the Bidding Documents, the Concession Agreement or under applicable law.

"The Authority" reserves the right to verify all statements, information and documents submitted by the Applicant in response to the TENDER. Any such verification or lack of such verification by the Authority shall not relieve the Applicant of its obligations or liabilities hereunder nor will it affect any rights of the Authority there under.

59 The bid shall be rejected if the bidder-

a. Stipulates the validity period less than 180 days.
b. Stipulates own condition/conditions.
c. Does not fill and (digital) sign undertaking forms, which are incorporated, in the document.

60 Clarifications

Applicants requiring any clarification on the tender may notify "the Authority" in writing or by fax or e-mail. They should send in their queries before the date specified in the header data. "The Authority" shall Endeavor to respond to the queries within the period specified therein. The responses will be sent by fax and/or e-mail. The Authority will forward all the queries and its

responses thereto, to all purchasers of the TENDER without identifying the source of queries.

"The Authority" shall Endeavor to respond to the questions raised or clarifications sought by the Applicants. However, the Authority reserves the right not to respond to any question or provide any clarification, in its sole discretion, and nothing in this Clause shall be taken or read as compelling or requiring the Authority to respond to any question or to provide any clarification, but not later than the date provided in header data.

"The Authority" may also on its own motion, if deemed necessary, issue interpretations and clarifications to all Applicants. All clarifications and interpretations issued by the Authority shall be deemed to be part of the tender. Verbal clarifications and information given by Authority or its employees or representatives shall not in any way or manner be binding on the Authority.

61 Amendment of tender

At any time prior to the deadline for submission of Application, the Authority may, for any reason, whether at its own initiative or in response to clarifications requested by an Applicant, modify the tender by the issuance of Addendum.

Any Addendum thus issued will be sent in writing/ Fax/ Email to all those who have purchased the tender.

In order to afford the Applicants a reasonable time for taking an Addendum into account, or for any other reason, the Authority may, in its sole discretion, extend the Application Due Date.

Preparation and Submission of Application

62 Language

The Application and all related correspondence and documents in relation to the Bidding Process shall be in English language. Supporting documents and printed literature furnished by the Applicant with the Application may be in any other language provided that they are accompanied by translations of all the pertinent passages in the English language, duly authenticated and certified by the Applicant. Supporting materials, which are not translated into English, may not be considered. For the purpose of interpretation and evaluation of the Application, the English language translation shall prevail.

63 Format and signing of Application

The Applicant shall provide all the information sought under this TENDER. The Authority will evaluate only those Applications that are received in the required formats and complete in all respects. Incomplete and /or conditional Applications shall be liable to rejection.

The Applicant will upload bid in One Folder in electronic form which shall contain the scanned certified copies of the documents given below and the documents uploaded has to be digitally signed by the bidder. These copies shall be certified by Practicing Notary approved by the Govt.

of Maharashtra or Govt. of India with his stamp, clearly stating his name & registration number, except where original documents are demanded

64 Marking of Applications

The Applicant shall submit the Application in the format specified at Appendix-I, together with the documents, upload in folder as "VENDOR" together with their respective enclosures

Applications submitted by fax, telex, telegram shall not be entertained and shall be rejected outright.

65 Late Applications

Applications received by the Authority after the specified time on the Application Due Date shall not be eligible for consideration and shall be summarily rejected.

66 Confidentiality

Information relating to the examination, clarification, evaluation, and recommendation for the short-listed qualified Applicants shall not be disclosed to any person who is not officially concerned with the process or is not a retained professional advisor advising the Authority in relation to or matters arising out of, or concerning the Bidding Process. The Authority will treat all information, submitted as part of Application, in confidence and will require all those who have access to such material to treat the same in confidence. The Authority may not divulge any such information unless it is directed to do so by any statutory entity that has the power under law to require its disclosure or is to enforce or assert any right or privilege of the statutory entity and/ or the Authority or as may be required by law or in connection with any legal process.

67 Clarification Of Financial Bids

To assist in the examination, evaluation and comparison of Bids, the Engineer may, at his discretion, ask any bidder for clarification of his Bid, including breakdown of unit rates. The request for clarification and the response shall be in writing or by post/facsimile/e-mail. No Bidder shall contact the Engineer on any matter relating to his bid from the time of the bid opening to the time the contract is awarded. Any effort by the Bidder to influence the Engineer in the Engineer's bid evaluation, bid comparison or contract award decisions may result in the rejection of the Bidder's bid.

68 Inspection of site and sufficiency of tender:

1. The Contractor shall inspect and examine the site and its surrounding and shall satisfy himself before submitting his tender as to the nature of the ground and subsoil (so far as is practicable), the form and nature of the site, the quantities and nature of the work and materials necessary for the completion of the works and means of access to the site, the accommodation he may require

and in general shall himself obtain all necessary information as to risk, contingencies and other circumstances which may influence or affect his tender. He shall also take into consideration the hydrological and climatic conditions.

2. The Employer may make available to the Contractor data on hydrological and sub-surface conditions as obtained by or on his behalf from investigations relevant to the works but the Contractor shall be responsible for his own interpretation thereof. The contractor shall engage his investigating agency with prior approval of the Engineer from the approved list of such agencies by BMC or Govt at his cost initially before commencing actual work and which shall be reimbursed immediately subject to satisfaction of the Engineer for faithful compliance and submission of required data regarding such investigation within specified time.

3. The Contractor shall be deemed to have satisfied himself before tendering as to the correctness and sufficiency of his tender for the works and of the rates and prices quoted in the schedule of works / items / quantities, or in Bill of Quantities, which rates and prices shall, except as otherwise provided cover all his obligations under the Contract and all matters and things necessary for proper completion and maintenance of the works. No extra charges consequent on any misunderstanding.

4. **Not Foreseeable Physical Obstructions or Conditions:** If, however, during the execution of the Works the Contractor encounters physical obstructions or physical conditions, other than climatic conditions on the Site, which obstructions or conditions were, in his opinion, not foreseeable by an experienced contractor, the Contractor shall forthwith give notice thereof to the Engineer. On receipt of such notice, the Engineer shall, if in his opinion such obstructions or conditions could not have been reasonably foreseen by an experienced contractor, after due consultation with the Contractor, determine:

- any extension of time to which the Contractor is entitled and
- The amount of any costs which may have been incurred by the Contractor by reason of such obstructions or conditions having been encountered, which shall be added to the Contract Price.
- and shall notify the Contractor accordingly. Such determination shall take account of any instruction which the Engineer may issue to the Contractor in connection therewith, and any proper and reasonable measures acceptable to the Engineer which the Contractor may take in the absence of specific instructions from the Engineer.However such costings shall be got approved by the competent authority as governed vide rules prevailing with authority.

5. **Office for the Engineer (Works costing upto Rs.50 Lakhs)**

The Contractor shall at his own cost and to satisfaction of the Engineer provide a small temporary office, at the work-site which will include tables, chairs and lockers for keeping the records. He shall also make necessary arrangements for drinking water, telephone with a pre-requisite of e-governance and electronic communication. These offices are not to be allowed on public roads without the written instruction of the Engineer. These offices should be preferably located within 50 to 500 m of the worksite. ~~In case the office is more than 500m away from the worksite, the contractor is to provide conveyance for Municipal Staff.~~

6. **Office for the Engineer (Works costing above Rs.50 lakhs)**

The Contractor shall at his own cost and to satisfaction of the Engineer provide a temporary office at the work-site which will include tables, chairs and lockers for keeping the records. He shall also make necessary arrangements for drinking water, latrines, with doors, windows, locks, bolts and fastenings sufficient for security for the Engineer, and his subordinates, as close to the works from time to time in progress as can be conveniently arranged, and shall at his own cost furnish the office with such chairs, tables, lockers, locks and fastenings as may be required by the Engineer, and no expense of any kind in connection with the erection or upkeep of the offices or fittings shall be borne by the Corporation, but all such work shall be carried out by the Contractor and the expenses thereof defrayed by him. The Contractor shall also make water connections and fit up stand pipe with a bib tap at each office. The latrines and the water connections shall be subject to all the conditions herein elsewhere laid down for temporary water connection and latrines generally with all requisite equipments for e-governance and electronic and digital communication. These offices are not to be allowed on public roads without the written instruction of the Engineer. These offices should be preferably located within 50 to 500 m of the worksite. ~~In case the office is more than 500m away from the worksite, the contractor is to provide conveyance. Also, for staff working beyond working hours the contractor has to provide conveyance.~~

7. **Permission for provision and removal of office on completion of work:** The tenderer shall obtain permission for provision of site office, cement go-down, store, etc. on payment of necessary cost implication. The cement go-down, Watchman cabins, etc. shall be provided as directed and shall be removed by the Tenderers on completion of the work at their cost. It is binding on the Tenderer to fulfill requirements of Environmental Authorities. The location of such office shall be finalized and got approved from the Engineer before erection/commencement work.

8. **Contractor's office near works**: The Contractor shall have an office near the works at which notice from the Commissioner or the Engineer may be served and shall, between the hours of sunrise and sunset on all working days, have a clerk or some other authorized person always present at such office upon whom such notices may be served and service of any notices left with such clerk or other authorized person or at such office shall be deemed good service upon the Contractor and such offices shall have pre-requisite facilities for e-governance.

69 Official Secrecy:

The Contractor shall of all the persons employed in any works in connection with the contract that the India Official Secrets Act 1923 (XIX of 1923) applies to them and will continue to apply even after execution of the said works and they will not disclose any information regarding this contract to any third party. The contractor shall also bring into notice that, any information found to be leaked out or disclosed the concern person as well as the Contractor will be liable for penal action; further the Corporation will be at liberty to terminate the contract without notice.

70 Subsequent Legislation:

If on the day of submission of bids for the contract, there occur changes to any National or State stature, Ordinance, decree or other law or any regulation or By-laws or any local or other duly constituted authority or the introduction of any such National or State Statute, Ordinance, decree or by which causes additional or reduced cost to the Contractor, such additional or reduced cost shall, after due consultation with the Contractor, be determined by the concerned Engineering Department of BMC and shall be added to or deducted from the Contract Price with prior approval of competent authority and the concerned Engineering Department shall notify the Contractor accordingly with a copy to the Employer. BMC reserve the right to take decision in respect of addition/reduction of cost in contract.

71 Patent, Right and Royalties:

The contractor shall save harmless and indemnify the Corporation from and against all claims and proceedings for or on account of infringement of any Patent rights, design trademark or name of other protected rights in respect of any constructional plant, machine work, or material used for or in connection with the Works or any of them and from and against all claims, proceedings, damages, costs, charges and expenses whatsoever in respect thereof or in relation thereto. Except where otherwise specified, the contractor shall pay all tonnage and other royalties, rent and other payments or compensation, if any, for getting stone, sand, gravel, clay or other materials required for the works or any of them.

72 Payments, Tax and Claims:

- **The limit for unforeseen claims**

  Under no circumstances whatever the contractor shall be entitled to any compensation from BMC on any account unless the contractor shall have submitted a claim in writing to the Eng-in-change within 1 month of the case of such claim occurring.

- **No interest for delayed payments due to disputes, etc:**

  It is agreed that the Brihanmumbai Municipal Corporationor its Engineer or Officer shall not be liable to pay any interest or damage with respect of any moneys or balance which may be in its or its Engineer's or officer's hands owing to any dispute or difference or claim or misunderstanding between the Brihanmumbai Municipal Corporation (BMC) or its Engineer or Officer on the one hand and the contractor on the other, or with respect to any delay on the part of the Brihanmumbai Municipal Corporation (BMC) or its Engineer or Officers in making periodical or final payments or in any other respect whatever.

73 Settlement of Disputes:

- **Termination of contract for death**

  If the Contractor is an individual or a proprietary concern and the individual or the proprietor dies and if the Contractor is a partnership concern and one of the legal representative of the individual Contractor or the proprietor of the proprietary concern and in case of partnership, thesurviving partners, are capable of carrying out and completing the contract, the Commissioner shall be entitled to cancel the contract as to its uncompleted part without the Corporation being in any way liable to payment of any compensation to the estate of the deceased Contractor and or to the surviving partners of the Contractor's firm on account of the cancellation of the contract. The decision of the Commissioner that the legal representative of the deceased Contractor or surviving partners of the Contractor's firm cannot carry out and complete the contract shall be final and binding on the parties. In the event of such cancellation the Commissioner shall not hold estate of the deceased Contractor and or surviving partners of the Contractor's firm liable in damages for not completing the contract.

- **Settlement of Disputes:**

  If any dispute or differences of any kind whatsoever other than those in respect of which, the decision of any person is, by the Contract, expressed to be final and binding) shall arise between the Employer and the Contractor or the Engineer and the Contractor in connection with or arising out of the Contract or carrying out of the Works (Whether during the progress of the Works or after their completion and whether before or after the termination, abandonment or breach of the Contract) it, the aggrieved party may refer such dispute within a period of 7 days to the concerned Addl. Municipal Commissioner who shall constitute a committee comprising of three officers i.e. concerned Deputy Municipal Commissioner or Director (ES&P), Chief Engineer other than the

Engineer of the Contract and concerned Chief Accountant. The Committee shall give decision in writing within 60 days. Appeal on the Order of the Committee may be referred to the Municipal Commissioner within 7 days. Thereafter the Municipal Commissioner shall constitute a Committee comprising of three Addl. Municipal Commissioners including Addl. Municipal Commissioner in charge of Finance Department. The Municipal Commissioner within a period of 90 days after being requested to doso shall give written notice of committee's decision to the Contractor. Save as herein provided such decision in respect of every matter so referred shall be final and binding upon both parties until the completion of the works, and shall forthwith be given effect to by the Contractor who shall proceed with the works with due diligence, whether he requires arbitration as hereinafter provided or not. If the Commissioner has given written notice of the decision to the Contractor and no Claim to arbitration has been communicated within a period of 90 days from receipt of such notice the said decision shall remain final and binding upon the Contractor.

74 Arbitration and Jurisdiction:

As per Hon. M.C.'s approval dtd. 17.08.2019, the existing clause is now replaced as follows (copy of the circular is attached at pg. 261 to 264):

If the Commissioner shall fails to give notice of the decision as aforesaid within a period of 90 days after being requested as aforesaid, or if the Contractor is dissatisfied with any such decision, then the Contractor may within 90 days after receiving notice of such decision or within 90 days after the expiration of the first named period of 90 days (as the case may be) require that the matter or matters in dispute be referred to arbitration as hereinafter provided.

i) In case of contract where the contract price and/or contract value is less than Rs.5,00,00,000/- (Rupees Five Crore Only), any dispute arising out of or in connection with this contract, including any question regarding its existence, validity or termination, shall be referred to a mutually agreed arbitral tribunal in accordance with the Arbitration & Conciliation Act, 1996 (amended upto date). The arbitral tribunal shall consist of a sole arbitrator, as mutually agreed upon by the parties and the said dispute shall be finally resolved by the said arbitral tribunal. The decision of the arbitral tribunal shall be in writing (with reasons) and which will be final and binding upon the parties hereto and the expenses of the arbitration shall be paid as may be determined by the arbitral tribunal. The seat of the arbitration shall be Mumbai. The language of the arbitration shall be English.

If the parties fails to appoint mutually agreed arbitral tribunal, within the period of 30 days from the date of application seeking arbitration in the dispute, the arbitral tribunal shall be appointed by the recognised arbitral institution i.e. Mumbai Centre for International Arbitration

(approved by Government of Maharashtra under G.R.No. ARB/Case No. 1/2017/D-19 dtd.28.02.2017) as per the Arbitration Rules of the Mumbai Centre for International Arbitration then in force ("MCIA Rules").

ii) In case of contract where the contract price and/or contract value is Rs.5,00,00,000/- (Rupees Five Crore Only) or more, any dispute arising out of or in connection with such a contract, including any question regarding its existence, validity or termination, shall be directly referred to & finally resolved by the recognised arbitral institution i.e. Mumbai Centre for International Arbitration (approved by Government of Maharashtra under G.R.No. ARB/Case No. 1/2017/D-19 dtd.28.02.2017) as per the Arbitration Rules of the Mumbai Centre for International Arbitration then in force ("MCIA Rules"). The arbitral tribunal shall consist of a sole arbitrator. The seat of the arbitration shall be Mumbai. The language of the arbitration shall be English.

In either case, the law governing this arbitration agreement and the contract shall be Indian Law.

75 Copyright:

The copyright of all drawings and other documents provided by the Contractor under the contract shall remain vested in the Contractor or his sub-contractors as the case may be the employer shall have a license to use such drawings and other documents in connection with the design, construction, operation, maintenance of the works. At any time the Employer shall have further license without additional payment to the Contractor to use any such drawings or documents for the purpose of making any improvement of the works or enlargement or duplication of any part thereof, provided that such improvement, enlargement, or duplication by itself or in conjunction with any other improvements, enlargements or duplications already made in accordance with the further license does not result in the duplication of the whole works.

76. **Receipts to be signed in firm's name by any one of the partners:**

Every receipt for money which may become payable or for any security which may become transferable to the Contractor under these present shall, if signed in the partnership name by any one of the partners, be a good and sufficient discharge to the Commissioner and Municipal Corporation in respect of the money or security purporting to be acknowledged thereby, and in the event of death of any of the partners during the pendency of this contract, it is hereby expressly agreed that every receipt by any one of the surviving partners shall, if so signed as aforesaid, be good and sufficient discharge as aforesaid provided that nothing in this clause contained shall be deemed to prejudice or effect any claim which the Commissioner or the Corporation may hereafter have against the legal representatives of any partners so dying or in respect of any breach of any of the conditions thereof, provided also that nothing in this clause contained shall

be deemed prejudicial or affect the respective rights or obligations of the Contractors and of the legal representatives of any deceased Contractors interest.

77 Proprietary data

All documents and other information supplied by the Authority or submitted by an Applicant to the Authority shall remain or become the property of the Authority. Applicants are to treat all information as strictly confidential and shall not use it for any purpose other than for preparation and submission of their Application. The Authority will not return any Application or any information provided along therewith.

78 Correspondence with the Applicant

Save and except as provided in this TENDER, the Authority shall not entertain any correspondence with any Applicant in relation to the acceptance or rejection of any Application.

79 Price Variation Clause

The Contractor shall be reimbursed or shall refund to the Corporation as he case may be the variation in the value of the work carried out from time to time, depending on whether the prices of material and labour as a whole rise or fall, and the method adopted for such computations shall be as given below, it being clearly understood that the contractor shall have no claim for being reimbursed on the ground that the price of a particular material or group of materials have risen beyond the limits of the presumptions made in the following paras, however, no price variations shall be made applicable for contracts upto 12 months:

A) Controlled materials: Price variations shall be permitted in respect of these materials the price level of which is controlled by the Government or its agency. The rate ruling on the date of submission of the tender shall be considered as the basic price of such material for adjustment. Any variation in this rate shall be considered for reimbursement to the contractor or refund to be claimed from the contractor as the case may be. The contractor shall, for the purpose of adjustment submit in original the relevant documents from the suppliers.

B) Labour and other materials: For the purpose of this contract and for allowing reimbursement of refund on account of variation of prices of (i) labour, and (ii) materials other than materials mentioned in A above, computation will be based on the formula enunciated below which is based on the presumptions that :

i) The general price level of labour, rises or falls in proportion to the rise or fall of consumer price index number 9 (general) for working class in Mumbai.

ii) The general price level of materials rises or falls in proportion to rise or fall of whole-sale price index as published by ‘Economic Adviser to Govt. of India’.

iii) And that the component of labour is to the extent of 30 percent of 88 percent and the component of materials is to the extent of 70 percent of 88 percent of the value of the work carried out. The remaining 12 percent being the presumptive profit of the contractor.

a) Formula for Labour component:

$$VL = \frac{(0.88\ R) \times 30}{100} \times \frac{(I - IO)}{IO}$$

b) Formula for Material component :

$$VM = \frac{(0.88\ R \times 70 - C)}{100} \times \frac{(W - WO)}{WO}$$

Where –

VL = Amount of price variation to be reimbursed or claimed as refund on account of general rise or fall of index referred to above.

I = Consumer Price Index number of working class for Mumbai (declared by the Commissioner of Labour and Director of Employment, Mumbai) applicable to the period under reference (base year ending 2004-05 as 100 i.e. new series of indices).

IO = Consumer price index number for working class for Mumbai (declared by the Commissioner of labour and Director of Employment, Mumbai) prevailing, on the day of 28 days prior to the date of submission of the tender.

VM = The amount of price variation to be reimbursed or claimed as refund on account of general rise or fall of wholesale price index for period under reference.

W = Average wholesale price index as published by Economic Adviser to Govt. of India applicable to the period under reference.

WO = Wholesale price index as stated above prevailing on the day of 28 days prior to the date of submission of the tender.

R = Total value of the work done during the period under reference as recorded in the Measurement Book excluding water charges and sewerage charges but including cost of excess in respect of item upto 50 percent

C = Total value of Controlled materials used for the works as recorded in Measurement Book and paid for at original basic rate plus the value of materials used .

i) The quantity of the Controlled material adopted in working out the value of 'C' shall be inclusive of permitted wastages as / if mentioned in specifications.

ii) The basic rate for the supply of controlled material shall be inclusive of all the components of cost of materials excluding transport charges incurred for bringing the material from place of delivery to the site.

Computations based on the above formula will be made for the period of each bill separately and reimbursement will be made to (when the result is plus) and refund will claimed from (when the result is minus) the contractor's next bill. The above formulae will be replaced by the formulae in Annexure-I as and when mentioned in special conditions of contract

The operative period of the contract for application of price variation shall mean the period commencing from the date of commencement of work mentioned in the work order and ending on the date when time allowed for the work order and ending on the date when time allowed for the work specified in the contract for work expires, taking into consideration, the extension of time, if any, for completion of the work granted by Engineer under the relevant clause of the conditions of contract in cases other than those where such extension is necessitated on account of default of the contractor.

The decision of the Engineer as regards the operative period of the contract shall be final and binding on the contractors.

iii) Where there is no supply of controlled items to contractor the component 'C' shall be taken as zero.

C) Adjustment after completion: If the Contractor fails to complete the works within the time for completion adjustment of prices thereafter until the date of completion of the works shall be made using either the indices or prices relating to the prescribed time for completion, or the current indices or prices whichever is more favorable to the employer, provided that if an extension of time is granted, the above provision shall apply only to adjustments made after the expiry of such extension of time.

D) Price variation will be calculated similarly and separately for extra items and / or excess quantities and provisional sums calculated under Sub Clause 10 (b)A (i)&(ii) and Sub Clause 10 (b) B(ii) based on the above formula/formulae in Annexure-I as and when mentioned in Special conditions of contract; IO and WO being the indices applicable to the date on which the rates under Sub Clause 10 (a)A (i)&(ii) and Sub Clause 10 (a) B(iii) are fixed. No price variation shall be admissible for FAIR items created during execution.

80. Maximum Price Variation shall be as follows:

Time Period of Project	Maximum limit of Price Variation
Up to 12 months	No variation allowed
Above12 months to 24	5%

months	
Above 24 months	**10%**

***Approval of AMC/MC shall be obtained before invitation of tender in case of any changes in above.**

Note: 1) The extension in time period for the projects originally estimated including monsoon results in change of price variation slabs as mentioned above i.e. from first slab to second slab or from second slab to third slab, then the maximum limit of original slab will prevail.

2) Operative period shall mean original or extended time period of contract.

For example:

Extension of Time period	**Maximum Price Variation**
If original period of 11 months **including** monsoon extends to 16. The operative period will be 11+5 months.	No variation allowed
If original period of 11 months **excluding** monsoon extends to 16. The operative period will be 11+5 months.	Maximum 5% variation allowed

Price Variation during Extended Period of Contract:

(i) Extension Due To Modification & Extension for delay due to BMC :

The price variation for the period of extension granted shall be limited to the amount payable as per the Indices. In case the indices increases or decreases, above/below the indices applicable, to the last month of the original or extended period vide clause8(l)(a)(i) and (ii) of standard GCC

(ii) Extension Of Time For Delay Due To Contractor:

(a) The price variation for the period of extension granted shall be limited to the amount payable as per the Indices in case the indices increase, above the indices applicable, to the last month of the original completion period or the extended period vide above clause 8(l)(a)(i) and (ii) of standard GCC.

(b) The price variation shall be limited to the amount payable as per the indices, in case the indices decrease or fall below the indices applicable, to the last month of original / extended period of completion period vide above clause 8(l)(b) of standard GCC, then lower indices shall be adopted.

(iii) Extension of Time for Delay due to reasons not attributable to BMC and Contractor (Reference Cl.8 (d) of Standard GCC):

The price variation for the period of extension granted shall be limited to the amount payable as per the Indices in case the indices increases or decreases, above/below the indices applicable, to the last month of the original period.

81. Payment:

Interim Payment:

i) Interim bills shall be submitted by the Contractor from time to time (but at an interval of not less than one month) for the works executed. The Engineer shall arrange to have the bill s verified by taking or causing to be taken, where necessary, the requisite measurement of work.

ii) Payment on account for amount admissible shall be made on the Engineer certifying the sum to which the Contractor is considered entitled by way of interim payment for all the work executed, after deducting there from the amount already paid, the security deposit / retention money and such other amounts as may be deductible or recoverable in terms of the contract.

iii) On request, the contractor will be paid upto 75 percent of the value of the work carried out as an adhoc payment in the first week of next month after deducting there from recoveries on account of advances, interest, retention money, income tax etc. The balance payment due will be paid thereafter.

iv) No interim payment will be admitted until such time the Contractor have fully complied with the requirement of the Condition no.8 (g) and 8 (h) concerning submission and approval of Network Schedule for the works, as detailed in Condition 8 (h). A fixed sum shall be held in abeyance at the time of next interim payment for non-attainment of each milestone in the network and shall be released only on attainment of the said milestone.

v) An interim certificate given relating to work done or material delivered may be modified or corrected by a subsequent interim certificate or by the final certificate. No certificate of the Engineer supporting an interim payment shall of itself be conclusive evidence that any work or materials to which it relates is / are in accordance with the contract.

82 Banning/De-Registration of Agencies of Construction works in BMC

- **The regulations regarding Demotion/ Suspension Banning for specific period or permanently / De-Registration shall be governed as per the respective condition in Contractor Registration Rules of BMC.**

83. JOINT VENTURE- (NOT APPLICABLE TO SUBJECT TENDER)

In case if Joint Venture is allowed for the Project, the guidelines for JV as follows shall be incorporated in the Tender Document:

a) Joint Venture should be allowed only when the number of identifiable different works is more than one and/or the estimated cost of tender is more than Rs.100 Crores. JV shall also be allowed for complex technical work below Rs.100 Crores with the approval of concerned AMC

b) Separate identity/name shall be given to the Joint Venture firm.

c) Number of members in a JV firm shall not be more than three in normal circumstances, if the work involves only one discipline (say Civil or Electrical). If number of members in JV is required to be more than three, then approval of concerned AMC needs to be sought.

d) A member of JV firm shall not be permitted to participate either in individual capacity or as a member of another JV firm in the same tender.

e) The tender form shall be purchased and submitted in the 'name of the JV firm or any constituent member of the JV.

f) Normally EMD shall be submitted only in the name of the JV and not in the name of constituent member. However, EMD in the name of lead partner can be accepted subject to submission of specific request letter from lead partner stating the reasons for not submitting the EMD in the name of JV and giving written confirmation from the JV partners to the effect that the EMD submitted by the lead partner may be deemed as EMD submitted by JV firm.

g) One of the members of the JV firm shall be the lead member of the JV firm who shall have a majority (at least 51%) share of interest in the JV firm. The other members shall have a share of not less than 20% each in case of JV firms with up to three members and not less than 10% each in case of JV firms with more than three members. In case of JV firm with foreign member(s), the lead member has to be an Indian firm with a minimum share of 51%.

h) A copy of Letter of Intent or Memorandum of Understanding (MoU) executed by the JV members shall be submitted by the JV firm along with the tender. The complete details of the members of the JV firm, their share and responsibility in the JV firm etc. particularly with reference to financial technical and other obligation shall be furnished in the agreement.

i) Once the tender is submitted, the agreement shall not be modified/altered/terminated during the validity of the tender. In case the tenderer fails to observe/comply with this stipulation, the full Earnest Money Deposit (EMD) shall be forfeited. In case of successful tenderer, the validity of this agreement shall be extended till the currency of the contract expires.

j) Approval for change of constitution of JV firm shall be at the sole discretion of the BMC. The constitution of the JV firm shall not be allowed to be modified after submission of the tender bid by the JV firm except when modification becomes inevitable due to succession laws etc. and in any case the minimum eligibility criteria should not get vitiated. In any case the Lead Member should continue to be the Lead Member of the JV firm. Failure to observe this requirement would render the offer invalid.

k) Similarly, after the contract is awarded, the constitution of JV firm shall not be allowed to be altered during the currency of contract except when modification become inevitable due to succession laws etc. and in any case the minimum eligibility criteria should not get vitiated. Failure to observe this stipulation shall be deemed to be breach of contract with all consequential penal action as per contract condition.

l) On award of contract to a JV firm, a single Performance Guarantee shall be required to be submitted by the JV firm as per tender conditions. All the Guarantees like Performance Guarantee, Bank Guarantee for Mobilization advance, machinery Advance etc. shall be accepted only in the name of the JV firm and no splitting of guarantees amongst the members of the JV firm shall be permitted.

m) On issue of LOA, an agreement among the members of the JV firm (to whom the work has been awarded) has to be executed and got registered before the Registrar of the Companies under Companies Act or before the Registrar / Sub-Registrar under the Registration Act, 1908. This agreement shall be submitted by the JV firm to the BMC before signing the contract agreement for the work. (This agreement format should invariably be part of the tender condition). In case the tenderer fails to observe/comply with this stipulation, the full Earnest Money Deposit (EMD) shall be forfeited and other penal actions due shall be taken against partners of the JV and the JV. This joint venture agreement shall have, inter-alia, following clauses:-

i. **Joint and several liability** - The members of the JV firm to which the contract is awarded, shall be jointly and severally liable to the Employer (BMC) for execution of the project in accordance with General and Special conditions of the contract. The JV members shall also be liable jointly and severally for the loss, damages caused to the BMC during the course of execution of the contract or due to no execution of the contract or part thereof.

ii. **Duration of the Joint Venture Agreement** -It shall be valid during the entire period of the contract including the period of extension if any and the maintenance period after the work is completed.

iii. **Governing Laws** - The Joint Venture Agreement shall in all respect be governed by and interpreted in accordance with Indian Laws.

iv. **Authorized Member** -Joint Venture members shall authorize one of the members on behalf of the Joint Venture firm to deal with the tender, sign the agreement or enter into contract in respect of the said tender, to receive payment, to witness joint measurement of work done, to sign measurement books and similar such action in respect of the said tender/contract. All notices/correspondences with respect to the contract would be sent only to this authorized member of the JV firm.

No member of the Joint Venture firm shall have the right to assign or transfer the interest right or liability in the contract without the written consent of the other members and that of the employer in respect of the said tender/contract.

n. Documents to be enclosed by the JV firm along with the tender:

i. In case one or more of the members of the JV firm is/are partnership firm(s), following documents shall be submitted:

- **a.** Notary certified copy of the Partnership Deed,
- **b.** Consent of all the partners to enter into the Joint Venture Agreement on a stamp paper of appropriate value (in original).
- **c.** Power of Attorney (duly registered as per prevailing law) in favor of one of the partners to sign the MOU and JV Agreement on behalf of the partners and create liability against the firm.

ii. In case one or more members is/are Proprietary Firm or HUF, the following documents shall be enclosed:

- **a.** Affidavit on Stamp Paper of appropriate value declaring that his Concern is a Proprietary Concern and he is sole proprietor of the Concern OR he is in position of "KARTA" of Hindu Undivided Family and he has the authority, power and consent given by other partners to act on behalf of HUF.

iii. In case one or more members is/are limited companies, the following documents shall be submitted:

- **a.** Notary certified copy of resolutions of the Directors of the Company, permitting the company to enter into a JV agreement, authorizing MD or one of the Directors or

Managers of the Company to sign MOU, JV Agreement, such other documents required to be signed on behalf of the Company and enter into liability against the company and/or do any other act on behalf of the company.

b. Copy of Memorandum and articles of Association of the Company.

c. Power of Attorney (duly registered as per prevailing law) by the Company authorizing the person to do/act mentioned in the para (a) above.

o. All the members of the JV shall certify that they have not been black listed or debarred by BMC from participation in tenders/contract in the past either in their individual capacity or the JV firm or partnership firm in which they were members / partners.

p. Credentials & Qualifying criteria: Technical and financial eligibility of the JV firm shall be adjudged based on satisfactory fulfillment of the following criteria:

Technical eligibility criteria: In case of Work involving single discipline, the Lead member of the JV firm shall meet at least 35% requirement of technical capacity as stipulated in tender document.

OR

In case of composite works (e.g. works involving more than one distinct component such as Civil Engineering works, M&E works, Electrical works, etc. and in the case of major bridges, substructure and superstructure etc.), at least one member should have satisfactorily completed 35% of the value of any one component of the project work so as to cover all the components of project work or any member having satisfactorily completed 35% of the value of work of each component during last seven financial years.

In such cases, what constitutes a component in a composite work shall be clearly defined as part of the tender condition without any ambiguity.

Financial eligibility criteria: The contractual payments received by the JV firm or the arithmetic sum of contractual payments received by all the members of JV firm in any one of the previous three financial years and shall be at least **100% of the estimated value** of the work as mentioned in the tender.

84. Compensation for delay:

If the Contractor fails to complete the works and clear the site on or before the Contract or extended date(s) / period(s) of completion, he shall, without prejudice to any other right or remedy of Municipal Corporation on account of such breach, pay as agreed compensation, amount calculated as stipulated below (or such smaller amount as may be fixed by the Engineer) on the contract value of the whole work or on the contract value of the time or group of items of work for which separate period of completion are given in the contract and of which completion is delayed for every week that the whole of the work of item or group of items of work concerned remains uncompleted, even though the contract as a whole be completed by the contract or the extended date of completion. For this purpose the term 'Contract Value' shall be the value of the work at Contract Rates as ordered including the value of all deviations ordered:

- Completion period for projects (originally stipulated or as extended) not exceeding 6 months:**to the extent of maximum 1 percent per week.**
- Completion period for projects (originally stipulated or as extended) exceeding 6 months and not exceeding 2 years: **to the extent of maximum ½ percent per week.**
- Completion period for projects (originally stipulated or as extended) exceeding 2 years:**to the extent of maximum ¼ percent per week.**

When the delay is not a full week or in multiple of a week but involves a fraction of a week the compensation payable for that fraction shall be proportional to the number of days involved.

Provided always that the total amount of compensation for delay to be paid this condition shall not exceed the undernoted percentage of the Contract Value of the item or group of items of work for which a separate period of completion is given.

i) Completion period (as originally stipulated or as extended) not exceeding 6 months: **10 percent.**

ii) Completion period (as originally stipulated or as extended) exceeding 6 months and not exceeding 2 years:**7½ percent.**

iii) Completion period (as originally stipulated or as extended) exceeding 2 years: **5 percent.**

The amount of compensation may be adjusted set off against any sum payable to the contractor under this or any other contract with the Municipal Corporation.

85. Action and Compensation Payable In Case Of Bad Work and Not Done As Per Specifications

All works under or in course of execution or executed in pursuance of the contract, shall at all times be open and accessible to the inspection and supervision of the Engineer-in-charge, his authorized subordinates in charge of the work and all the superior officers, officer of the Vigilance Department of the BMC or any organization engaged by the BMC for Quality Assurance and the contractor shall, at all times, during the usual working hours and at all other times at which reasonable notice of the visit of such officers has been given to the contractor, either himself be present to receive orders and instructions or have a responsible agent duly accredited in writing, present for that purpose. Orders given to the Contractor's agent shall be considered to have the same force as if they had been given to the contractor himself.

If it shall appear to the Engineer-in-charge or his authorized subordinates in-charge of the work or to the officer of Vigilance Department, that any work has been executed with unsound, imperfect or unskillful workmanship or with materials of any inferior description, or that any materials or articles provided by him for the execution of the work are unsound or of a quality inferior to that contracted for or otherwise not in accordance with the contract, the contractor shall, on demand in writing which shall be made within twelve months of the completion of the work from the Engineer-in-Charge specifying the work, materials or articles complained of notwithstanding that the same may have been passed, certified and paid for forthwith rectify, or remove and reconstruct the work so specified in whole or in part, as the case may require or as the case may be, remove the materials or articles so specified and provide other proper and suitable materials or articles at his own charge and cost. In the event of the failing to do so within a period specified by the Engineer-in-Charge in his demand aforesaid, then the contractor shall be liable to pay compensation at the same rate as under clause 8.e. of the general condition of contract in section 9 of tender document (for Compensation for delay) for this default. In such case the Engineer-in Charge may not accept the item of work at the rates applicable under the contract but may accept such items at reduced rates as the Engineer in charge may consider reasonable during the preparation of on account bills or final bill if the item is so acceptable without detriment to the safety and utility of the item and the structure or he may reject the work outright without any payment and/or get it and other connected and incidental items rectified, or removed and re-executed at the risk and cost of the contractor. Decision of the Engineer-in-Charge to be conveyed in writing in respect of the same will be final and binding on the contractor.

If the penalisation amount exceeds maximum limit with respect to Clause 8.e of Standard General Conditions of Contract, then a show cause notice shall necessarily be issued to the contract as to why the contract should not be terminated.

86. Contractors remain liable to pay compensation:

In any case in which any of the powers conferred upon the Engineer In-charge by the **relevant clauses** in documents that form a part of contract as exercised or is exercisable in the event of any future case of default by the Contractor, he is declared liable to pay compensation amounting to the whole of his security deposit. The liability of the Contractor for past and future compensation shall remain unaffected.

In the event of the Executive Engineer taking action against these **relevant clauses,** he may, if he so desires, take possession of all or any tools and plant, materials and stores in or upon the work of site thereof or belonging to the Contractor or procured by him and intended to be used for the execution of the work or any part thereof paying or allowing for the same in account at the contract rates, or in the case of contract rates not being applicable at current market rates to be certified by the Executive Engineer, may after giving notice in writing to the Contractor or his staff of the work or other authorized agent require him to remove such tools and plants, materials or stores from the premises within a time to be specified in such notice and in the event of the Contractor failing to comply with any such requisition, the Executive Engineer may remove them at the contractors expense of sell them by auction or private sell on account of the Contractor at his risk in all respects and certificate of the Executive Engineer as to the expense of any such removal and the amount of the proceeds an expense of any such sell be final and conclusive against the Contractor.

87. No Claim to Any Payment or Compensation or Alteration inor Restriction of Work

(a) If at any time after the execution of contract documents, the Engineer shall for any reason whatsoever, desires that the whole or any part of the works specified in the Tender should be suspended for any period or that the whole or part of the work should not be carried out, at all, he shall give to the Contractor a Notice in writing of such desire and upon the receipt of such notice, the Contractor shall forthwith suspend or stop the work wholly or in part as required after having due regard to the appropriate stage at which the work should be stopped or suspended so as not to cause any damage or injury the work already done or endanger the safety thereof, provided that the decision of the Engineer as to the stage at which the work or any part of it could be or could have been safely stopped or suspended shall be final and conclusive against the contractor.

The Contractor shall have no claim to any payment or compensation whatsoever by reason of or in pursuance of any notice as aforesaid, on account of any suspension, stoppage or curtailment except to the extent specified hereinafter.

(b)Where the total suspension of Work Order as aforesaid continued for a continuous period exceeding 90 days the contractor shall be at liberty to withdraw from the contractual obligations under the contract so far as it pertains to the unexecuted part of the work by giving 10 days prior notice in writing to the Engineer within 30 days of the expiry of the said period of 90 days, of such intention and requiring the Engineering to record the final measurement of the work already done and to pay final bill. Upon giving such Notice, the Contractor shall be deem to have been discharged from his obligations to complete the remaining unexecuted work under his contract. On receipt of such notice the Engineer shall proceed to complete the measurement and make such payment as may be finally due to the contractor within a period of 90 days from the receipt of such Notice in respect of the work already done by the contractor. Such payment shall not in any manner prejudice the right of the contractor to any further compensation under the remaining provisions of this clause.

(c) Where the Engineer required to Contractor to suspend the work for a period in excess of 30 days

at any time or 60 days in the aggregate, the Contractor shall be entitled to apply to the Engineer within 30 days of the resumption of the work after such suspension for payment of compensation to the extent of pecuniary loss suffered by him in respect of working machinery remained ideal on the site of on the account of his having an to pay the salary of wages and labour engaged by him during the said period of suspension provided always that the contractor shall not be entitled to any claim in respect of any such working machinery, salary or wages for the first 30 days whether consecutive or in the aggregate or such suspension or in respect of any such suspension whatsoever occasion by unsatisfactory work or any other default on his part, the decision of the Engineer in this regard shall be final and conclusive against the contractor.

88. Contractor to supply plant, ladder, scaffolding, etc and is liable for damages arising from non provision of lights, fencing, etc.

The Contractor shall supply at his own cost all material, plant, tools, appliances, implements, ladders, cordage, tackle scaffolding and temporary works requisite or proper for the proper execution of the work, whether, in the original altered or substituted form and whether included in the specification of other documents forming part of the contract or referred to in these conditions or not and which may be necessary for the purpose of satisfying or complying with the requirements of the Eng-In-Charge as to any matter as to which under these conditions is entitled to be satisfied, or which is entitled to require together with the carriage therefore to and from the work.

The Contractor shall also supply without charge, the requisite number of person with the means and materials necessary for the purpose of setting out works and counting, weighing and assisting in the measurements of examination at any time and from time to time of the work or materials, failing which the same may be provided by the Engineer In-charge at the expense of the contractor and the expenses may be deducted from any money due to the contractor under the contract or from his security deposit or the proceeds of sale thereof, or offers sufficient portion thereof.

The contractor shall provide all necessary fencing and lights required to protect the public from accident and shall also be bound to bear the expenses of defence of every suit, action or other legal proceedings, that may be brought by any person for injury sustained owing to neglect of the above precautions and to pay any damages and cost which may be awarded in any such suit action or proceedings to any such person or which may with the consent of the contractor be paid for compromising any claim by any such person.

89. Prevention of Fire:

The contractor shall not set fire to any standing jungle, trees, brushwood or grass without a written permit from the Engineer In-charge. When such permit is given, and also in all cases when destroying cut or dug up trees brushwood, grass, etc., by fire, the contractor shall take necessary measure to prevent such fire spreading to or otherwise damaging surrounding property. The Contractor shall make his own arrangements for drinking water for the labour employed by him.

90. Compensation for all damages done intentionally or unintentionally by contractor's labour whether in or beyond the limits of BMC property including any damage caused by spreading the fire shall be estimated by the Engineer In-charge or such other officer as he may appoint and the estimate of the Engineer in-charge to the decision of the Dy. Chief Engineer on appeal shall be final and the contractor shall be bound to pay the amount of the assessed compensation on demand failing which the same will be recovered from the Contractor as damages or deducted by the Engineer In-charge from any sums that may be due or become due from BMC to contractor under this Contract or

otherwise. Contractor shall bear the expenses of defending any action or other legal proceedings that may be brought to prevent the spread of fire and he shall pay any damages and costs that may be awarded by the Court in consequence.

91. In the case of Tender by partners, any change in the constitution of the firm shall be forthwith, notified by the contractor through the Engineer In-charge for his information.

92. Action where no specifications:

In the case of any class of work for which there is no such specifications, such works shall be carried out in accordance with the specifications and in the event of there being no such specifications, then in such case, the work shall be carried out in all respects in accordance with all instructions and requirements of the Engineer In-charge.

93. Safety and medical help:

(i) The Contractor shall be responsible for and shall pay the expenses of providing medical help to any workmen who may suffer a bodily injury as a result of an accident. If such expenses are incurred by BMC, the same shall be recoverable from the contractor forthwith and be included without prejudice to any other remedy of BMC from any amount due or that may become due to the Contractor.

(ii) The contractor shall provide necessary personal safety equipment and first-aid box for the use of persons employed on the site and shall maintain the same in condition suitable for immediate use at any time.

(iii) The workers shall be required to use the safety equipments so provided by thecontractor and the contractor shall take adequate steps to ensure the proper use of equipments by those concerned.

(iv) When the work is carried on in proximity to any place where there is risk or drawing all necessary equipments shall be provided and kept ready for use and all necessary steps shall be taken for the prompt rescue of any person in danger.

94. No compensation shall be allowed for any delay caused in the starting of the work on account of acquisition of land or in the case of clearance of works, on account of ant delay in according to sanction of estimates.

95. Anti-malaria and other health measures:

Anti-Malaria and other health measures shall be taken as directed by the Executive Health Officer of BMC. Contractor shall see that mosquitogenic conditions are created so as to keep vector population to minimum level.Contractor shall carry out anti-malaria measures in the area as per the guidelines issued by the Executive Health Officer of BMC from time to time.

In case of default, in carrying out prescribed anti-malaria measures resulting in increase in malaria incidence, contractor shall be liable to pay BMC on anti-malaria measures to control the situation in addition to fine.

96. Tender shall note that policy guidelines issued under Hon'ble M.C.'s Circular Vide No. MBC/6913 dated 05.05.2020 for engaging labour for providing reservation shall be applicable to the contract work under reference. (Copy of the circular at page 265 to 266).

This page is intentionally kept Blank

SECTION 10

SPECIFICATIONS

& SELECTION OF MATERIAL

This page is intentionally kept Blank

10.1 SPECIFICATIONS & SELECTION OF MATERIAL

The tender is prepared on the basis of Unified Schedule of Rates and specifications 2023. The specifications of the items of USOR are available on BMC portal http://portal.mcgm.gov.inunder the Tender tab. Hence the deserving contractor shall either download the same from BMC portal or the same may be collected in the soft copy format at the time of purchasing the tender from this office.

10.2 SELECTION OF MATERIAL

1. All materials brought on the site of work and meant to be used in the same, shall be the best of their respective kinds and to the approval of the Engineer. The Engineer or his representative will accept that the materials are really the best of their kinds, when it is proved beyond doubt that no better materials of the particular kind in question are available in the market.
2. The contractor shall obtain the approval of the Engineer of samples of all materials to be used in the works and shall deposit these samples with him before placing an order for the materials with the suppliers. The materials brought on the works shall conform in every respect to their approved samples. Fresh samples shall be deposited with the Engineer whenever the type or source of any material changes.
3. The contractor shall check each fresh consignment of materials as it is brought to the site of works to see that they conform in all respects to the Specifications of the samples approved by the Engineer, or both.
4. The Engineer will have the option to have any of the materials tested to find out whether they are in accordance with the Specifications and the Contractor will bear all expenses for such testing. All B bills, vouchers and test certificates, which in the opinion of the Engineer or his representative are necessary to convince him as to the quality of the materials or their suitability shall be produced for his inspection when required.
5. Any materials that have not been found to conform to the specifications will be rejected forthwith and shall be removed from the site by the contractor at his own cost within 24 hours.
6. The Engineer shall have power to cause the Contractors to purchase and use such materials from any particular source, as may in his opinion be necessary for the proper execution of the work.
7. Notwithstanding the source, the sand shall be washed using sand washing machine before use.

This page is intentionally kept Blank

SECTION 11

FRAUD

AND

CORRUPT

PRACTICES

This page is intentionally kept Blank

FRAUD AND CORRUPT PRACTICES

- The Applicants and their respective officers, employees, agents and advisers shall observe the highest standard of ethics during the Bidding Process. Notwithstanding anything to the contrary contained herein, the Authority may reject an Application without being liable in any manner whatsoever to the Applicant if it determines that the Applicant has, directly or indirectly or through an agent, engaged in corrupt practice, fraudulent practice, coercive practice, undesirable practice or restrictive practice in the Bidding Process.
- Without prejudice to the rights of the Authority under relevant Clause hereinabove, if an Applicant is found by the Authority to have directly or indirectly or through an agent, engaged or indulged in any corrupt practice, fraudulent practice, coercive practice, undesirable practice or restrictive practice during the Bidding Process, such Applicant shall not be eligible to participate in any tender or RFQ issued by the Authority during a period of 2 (two) years from the date such Applicant is found by the Authority to have directly or indirectly or through an agent, engaged or indulged in any corrupt practice, fraudulent practice, coercive practice, undesirable practice or restrictive practice, as the case may be.
- For the purposes of this Clause , the following terms shall have the meaning hereinafter respectively assigned to them:

A. "**corrupt practice**" means

the offering, giving, receiving, or soliciting, directly or indirectly, of anything of value to influence the actions of any person connected with the Bidding Process (for avoidance of doubt, offering of employment to, or employing, or engaging in any manner whatsoever, directly or indirectly, any official of the Authority who is or has been associated in any manner, directly or indirectly, with the Bidding Process or the LOA or has dealt with matters concerning the Concession Agreement or arising there from, before or after the execution thereof, at any time prior to the expiry of one year from the date such official resigns or retires from or otherwise ceases to be in the service of the Authority, shall be deemed to constitute influencing the actions of a person connected with the Bidding Process); or

save and except as permitted under the relevant sub clause, engaging in any manner whatsoever, whether during the Bidding Process or after the issue of the LOA or after the execution of the Concession Agreement, as the case may be, any person in respect of any matter relating to the Project or the LOA or the Concession Agreement, who at any time has been or is a legal, financial or technical adviser of the Authority in relation to any matter concerning the Project;

B. **"fraudulent practice"** means a misrepresentation or omission of facts or suppression of facts or disclosure of incomplete facts, in order to influence the Bidding Process ;

C. **"coercive practice"** means impairing or harming or threatening to impair or harm, directly or

indirectly, any person or property to influence any persons participation or action in the Bidding Process;

D. **"undesirable practice"** means (i) establishing contact with any person connected with or employed or engaged by the Authority with the objective of canvassing, lobbying or in any manner influencing or attempting to influence the Bidding Process; or (ii) having a Conflict of Interest; and

E. **"Restrictive practice"** means forming a cartel or arriving at any understanding or arrangement among Applicants with the objective of restricting or manipulating a full and fair competition in the Bidding Process.

F. If the Employer/Financier determines that the Contractor has engaged in corrupt, fraudulent, collusive, coercive or obstructive practices, in competing for or in executing the Contract, then the Employer may, after giving 14 days' notice to the Contractor, terminate the Contractor's employment under the Contract and expel him from the Site, and the provisions of relevant Clause shall apply as if such expulsion had been made.

G. Should any employee of the Contractor be determined to have engaged in corrupt, fraudulent, collusive, coercive, or obstructive practice during the execution of the Works, then that employee shall be removed in accordance with relevant Clause.

For the purposes of this Sub-Clause:

i. "corrupt practice" is the offering, giving, receiving to soliciting, directly or indirectly, of anything of value to influence improperly the actions of another party;

ii. "Another party" refers to a public official acting in relation to the procurement process or contract execution. In this context, "public official" includes Financer staff and employees of other organizations taking or reviewing procurement decisions.

iii. "fraudulent practice" is any act or omission, including a misrepresentation, that knowingly or recklessly misleads, or attempts to mislead, a party to obtain a financial or other benefit or to avoid an obligation;

iv. "collusive practice" is an arrangement between two or more parties designed to achieve an improper purpose, including to influence improperly the actions of another party;

v. "coercive practice" is impairing or harming, or threatening to impair or harm, directly or indirectly, any party or the property of the party to influence improperly the actions of a party;

vi. "obstructive practice" is deliberately destroying, falsifying, altering or concealing of evidence material to the investigation or making false statements to investigators in order

to materially impede the Financier investigation into allegations of a corrupt, fraudulent, coercive or collusive practice; and/or threatening, harassing or intimidating any party to prevent it from disclosing its knowledge of matters relevant to the investigation or from pursuing the investigation; or

vii. Acts intended to materially impede the exercise of the Financer's inspection and audit rights provided.

viii. "party" refers to a public official; the terms "benefit" and "obligation" relate to the procurement process or contract execution; and the "act or omission" is intended to influence the procurement process or contract execution.

ix. "parties" refers to participants in the procurement process (including public officials) attempting to establish bid prices at artificial, noncompetitive levels.

x. A "party" refers to a participant in the procurement process or contract execution.

This page is intentionally kept Blank

SECTION 12

PRE BID MEETING

This page is intentionally kept Blank

PREBID MEETING

Pre-bid meeting of the interested parties shall be convened at the designated date, time and place. A maximum of three representatives of each Applicant shall be allowed to participate on production of authority letter from the Applicant.

During the course of Pre-bid meeting, the Applicants will be free to seek clarifications and make suggestions for consideration of the Authority. The Authority shall Endeavour to provide clarifications and such further information as it may, in its sole discretion, consider appropriate for facilitating a fair, transparent and competitive Bidding Process.

6.9.1 Interpretation of e-Tender Document:

a) Tenderer(s) shall examine the tender document and acquaint themselves to all conditions and matters affecting the cost of the works. If any tenderer(s) finds discrepancies or omissions in the Document or if in doubt about their meaning, he should address a query during pre-bid meeting.

b) Any resulting interpretation of the tender document will be issued to tenderer(s) as an addendum. Verbal clarification obtained from any source shall not be binding on the Corporation.

c) No tenderer(s) shall amend the text of any document except as may be necessary to comply with any addendum.

6.9.2 Clarification of e-Tendering Documents

Pre-bid meeting (If proposed as per e-Tender notice)

a) The tenderer or his authorized representative is allowed to attend a pre-bid meeting as per the date, time and venue mentioned in the tender notice/header data.
b) The purpose of the pre-bid meeting will be to clarify issues and to answer questions on any matter that may be raised prior to the pre-bid meeting.
c) Any tenderer requiring any clarification of the tender document and/or the works may submit his questions on E.E.W.W.(Const) City e-mail i.e. **eeconstcity.he@mcgm.gov.in** Please note that all emails which will reach the inbox on or before 24.11.2026 **till 5.00 p.m.** will be considered for pre-bid meeting.

This page is intentionally kept Blank

SECTION –13

LIST OF APPROVED BANKS

This page is intentionally kept Blank

LIST OF APPROVED BANKS

1. The following Banks with their branches in Greater Mumbai and in suburbs and extended suburbs up to Virar and Kalyan have been approved only for the purpose of accepting Banker's guarantee from 1997-98 onwards until further instructions.

2. The Bankers Guarantee issued by branches of approved Banks beyond Kalyan and Virar can be accepted only if the said Banker's Guarantee is countersigned by the Manager of a branch of the same Bank, within the Mumbai Limit categorically endorsing thereon that said bankers Guarantee is binding on the endorsing Branch of the bank within Mumbai limits and is liable to be on forced against the said branch of the Bank in case of default by the contractor/supplier furnishing the bankers Guarantee.

3. **List of approved Banks as per circular no CA/FBK/241 dt 27.11.2019 is attached at pg. no 294 to 297.**

This page is intentionally kept Blank

SECTION –14
APPENDIX

FORM OF TENDER

To,

The Municipal Commissioner for Greater Mumbai

Sir,

I/ We have read and examined the following documents relating to the construction of _____

_____

i. Notice inviting tender.
ii. Directions to tenderers (General and special)
iii. General condition of contract for Civil Works of the Brihanmumbai Municipal Corporation2016 as applicable.
iv. Relevant drawings
v. Specifications.
vi. Special directions
vii. Annexure A, B, C, E & I.
viii. Bill of Quantities and Rates.

1A. I/We_____

(full name in capital letters, starting with surname), the Proprietor/ Managing Partner/ Managing Director/ Holder of the Business, for the establishment / firm / registered company, named herein below, do hereby offer to ……

……..……

……..……..……..……

Referred to in the specifications and schedule to the accompanying form of contract of the rates entered in the schedule of rates sent herewith and signed by me/ us" (strike out the portions which are not applicable).

1B. I/We do here by state and declare that I/We, whose names are given herein below in details with the addresses, have not filled in this tender under any other name or under the name of any other establishment /firm or otherwise, nor are we in any way related or concerned with the establishment /firm or any other person, who have filled in the tender for the aforesaid work."

2. I/We hereby tender for the execution of the works referred to in the aforesaid documents, upon the terms and conditions, contained or referred to therein and in accordance with the specifications designs, drawings and other relevant details in all respects.

* At the rates entered in the aforesaid Bill of Quantities and Rates.

3. According to your requirements for payment of Earnest Money amounting to Rs._____**/-(Rs.**_____)

I/We have deposited the amount through online payment gateways with the C.E. of the Corporation not to bear interest

4. I/We hereby request you not to enter into a contract with any other person/s for the execution of the works until notice of non/acceptance of this tender has first been communicated to me/us, and in consideration of yours agreeing to refrain from so doing I/we agree not to withdraw the offer constituted by this tender before the date of communication to me/us of such notice of non/acceptance, which date shall be not later than ten days from the date of the decision of the Standing Committee or Education Committee of the Corporation, as maybe required under the Mumbai Municipal Corporation Act, not to accept this tender.(Subject to condition 5 below).

5. I/We also agree to keep this tender open for acceptance for a period of 180 days from the date fixed for opening the same and not to make any modifications in its terms and conditions which are not acceptable to the Corporation.
6. I/We agree that the Corporation shall, without prejudice to any other right or remedy, be at liberty to forfeit the said earnest money absolutely, if.

a. I/We fail to keep the tender open as aforesaid.

b. I/We fail to execute the formal contract or make the contract deposit when called upon to do so.

c. I/we do not commence the work on or before the date specified by the Engineer in his work order.

7. I/We hereby further agree to pay all the charges of whatsoever nature in connection with the preparation, stamping and execution of the said contract.
8. I/We further agree that, I/we shall register ourselves as 'Employer' with the Bombay Iron and Steel Labour Board' and fulfil all the obligatory provisions of Maharashtra Mathadi, Hamal and other Manual workers (Regulation of Employment and Welfare) Act 1969 and the Bombay Iron and Steel unprotected workers Scheme 1970.
9. "I/We…….…….. have failed in the accompanying tender with full knowledge of liabilities and, therefore, we will not raise any objection or dispute in any manner relating to any action, including forfeiture of deposit and blacklisting, for giving any information, which is found to be incorrect and against the instructions and directions given in this tender.
10. "I/We further agree and undertake that in the event it is revealed subsequently after the allotment of work/contract to me/us, that any information given by me/us in this tender is false or incorrect, I/We shall compensate the Brihanmumbai Municipal Corporation for any such losses or inconvenience caused to the Corporation in any manner and will not resist any claim for such compensation on any ground whatsoever. I/we agree and undertake that I/we shall not claim in such case any amount by way of damages or compensation for cancellation of the contract given to me/us or any work assigned to me/us or is withdrawn by the Corporation,"

Address

Yours faithfully,

……

…….

Signature of the Tenderer or the Firm

1.…….

2.…….

3.…….

4.…….

5.…….

Full Name and private residential address of all the partners constituting the Firm

1. ……..
2. ……..
3. ……..
4. ……..
5. ……..

A/c No.

……

Name of Bank

……

Name of Branch

……

Vender No. ……

AGREEMENT FORM

Tender / Quotation dated ……. 20…

Standing Committee/Education Committee Resolution No. ……..…….CONTRACT FOR THE WORKS ……..……..……..……
……...…….……
……...……
This agreement made this day of …… ……. …… ……
Two thousand ……...…..…..……..…… Between ..……...……...…….…….……
……..…….……..…..…
inhabitants of Mumbai, carrying on business at…… ……..…..…… …… …
……...…….……
in Bombay under the style and name of Messrs ……..……
……...……
(Hereinafter called "the contractor of the one part and Shri ……
…….…….…….
the D.M.C.(S.E.) (hereinafter called "the commissioner" in which expression are included unless the inclusion is inconsistent with the context, or meaning thereof, his successor or successors for the time being holding the office of D.M.C.(S.E.) of the second part and the Brihanmumbai Municipal Corporation(hereinafter called "the Corporation") of the third part, WHEREAS the contractor has tendered for the construction, completion and maintenance of the works described above and his tender has been accepted by the Commissioner (with the approval of the Standing Committee/Education Committee of the Corporation NOW THIS
THIS AGREEMENT WITNESSETH as follows:-

1) In this agreement words and expressions shall have the same meanings as are respectively assigned to them in the General Conditions of Contract for works hereinafter referred to:-

2) The following documents shall be deemed to form and be read and constructed as a part of this agreement viz.

b) The letter of Acceptance

c) The Bid:

d) Addendum to Bid; if any

e) Tender Document

f) The Bill of Quantities:

g) The Specification:

h) Detailed Engineering Drawings

i) Standard General Conditions of Contracts (GCC) as applicable (2016)

j) All correspondence documents between bidder and BMC

3) In consideration of the payments to be made by the Commissioner to the contractor as hereinafter mentioned the contractor hereby covenants with the Commissioner to construct, complete and maintain the works in conformity in all respects with the provision of the contract.

4) The Commissioner hereby covenants to pay to the Contractor in consideration of the construction, completion and maintenance of the works the contract sum, at times and in the manner prescribed by the contract.

IN WITNESS WHERE OF the parties hereto have caused their respective common seals to be herein to affixed (or have hereunto set their respective hands and seals) the day and year above written.

Signed, Sealed and delivered by the contractors

_____	_____
_____	_____
_____	_____
In the presence of	Trading under the name and style of
_____	_____
_____	_____

Full Name
Address

Signed by the DMC(SE) in the presence of

_____

_____

The Common seal of the Brihanmumbai Municipal Corporationwas hereunto affixed on the ……..... 20 in the presence of two members of the Standing Committee.

1.	1.
2.	2.
And in the presence of the Municipal Secretary	Municipal Secretary

ANNEXURE "A"

Name of work :-

(HE-C-CT-IMPRO-09) Laying of 1200 mm dia. 2 nos of MS water carrier pipe through 1500 mm dia. (2 nos) MS casing pipe by Micro tunneling method below railway track at KM 13/250-285 near Mahim Railway station, Mahim G/North ward in Zone-II.

a)Name of Zone	**City Zone II**
b) Estimated cost of Tender	**Rs.16,66,11,400/- (Excluding GST)**
c)Earnest Money (1% of the Estimated Costof the tender)	**Rs.16,66,200/-**
1. Definition	: The Engineer for this work is **Hydraulic Engineer(HE)**
2. Security Deposit Amended	
a)Contract Deposit	: 2% of the Contract Sum
b) Retention Money	: 5% of the Interim payment.
3.Contract Period	: 18 (Eighteen Months) excluding Monsoon.
Contract as a whole	
4. Defect Liability Period	: mentioned as under
~~**For laying of CI/DI/MS/MDPE WM upto and including 300mm dia. and allied works as specified &**Repair/ construction of valve chambers~~ **For work of laying of water main of size more than 300mm diameter and allied works as specified**	~~**1 year**~~ **3 years**
DLP for R.I. work in various types of road surfaces: B) Carriage way:	
1. For Asphalt Work	: 3 Years
2. Paver Blocks	3 Years
3. Mastic Works	3 Years

4. UTWT/TWT Works	3 Years
5. CC Passage/CC Side strip	3 Years
6. CC Road	3 Years
5.Supervision Charges	: Ten percent (10%)
6.Advances (Recovery of advances)	: as per G.C.C

Signature of Issuing Officer
Date:

Signature of Contractor

Financial Bid Form

I/We hereby confirm that I/ We have examined Tender Document including addendum etc. (as applicable), conditions of contract, specification, drawings, Bill of Quantities etc. forming part of the Tender and accordingly I/we hereby submit my/our offer to execute as per the tender documents in all respects at the quoted below.

1. Name of the Work **: As on Cover page**
2. Name of Client **: M. C. G. M.**
3. Name of Department **: Hydraulic Engineer**
4. Estimated Cost :Rs.
(To be filled in by Tenderer)

5a) Premium (in Figures) _____**%** above the rates in B.O.Q/ Estimated cost.

(in Words)_____**%** above the rates in B.O.Q / Estimated cost.

Rs_____In Words

Rs_____

OR

Rebate(in Figures) _____% above the rates in B.O.Q /Estimated cost.(in Words)_____% above the rates in B.O.Q /Estimated cost.Rs_____

In Word **Rs**_____

6. Total Cost of the Work **Rs**_____
In Words**Rs**_____

7. Name and Title of Signatory **:**_____

8. Name and address of tenderer **:**_____

9. E mail address of the firm **:** _____

Telephone Nos. **:**_____

Signature of the Tenderer of the Firm

Full Names and Residential address and Tel. nos. of all partners constituting the firms:	**1.**
	2.
	3.
	4.

(A separate sheet shall be attached for Names and addresses if necessary)

Annexure- B

PRE-CONTRACT INTEGRITY PACT

The Bidder commits himself to take all measures necessary to prevent corrupt practices, unfair means and illegal activities during any stage of his bid or during any pre-contract or post-contract stage in order to secure the contract or in furtherance to secure it and in particular commits himself to the following:-

1. The Bidder will not offer, directly or through intermediaries, any bribe, gift, consideration, reward, favour, any material or immaterial benefit or other advantage, commission, fees, brokerage or inducement to any official of the BMC, connected directly or indirectly with the bidding process, or to any person, organization or third party related to the contract in exchange for any advantage in the bidding, evaluation, contracting and implementation of the Contract.

2. The Bidder further undertakes that he has not given, offered or promised to give, directly or indirectly any bribe, gift, consideration, reward, favour, any material or immaterial benefit or other advantage, commission, fees, brokerage or inducement to any official of the BMC or otherwise in procuring the Contract or forbearing to do or having done any act in relation to the obtaining or execution of the Contract or any other Contract with the Government for showing or forbearing to show favour or disfavour to any person in relation to the Contract or any other Contract with the Government.

3. The Bidder will not collude with other parties interested in the contract to impair the transparency, fairness and progress of the bidding process, bid evaluation, contracting and implementation of the contract.

4. The Bidder will not accept any advantage in exchange for any corrupt practice, unfair means and illegal activities.

5. The Bidder, either while presenting the bid or during pre-contract negotiations or before signing the contract, shall disclose any payments he has made, is committed to or intends to make to officials of the BMC or their family members, agents, brokers or any other intermediaries in connection with the contract and the details of services agreed upon for such payments.

6. The Bidder shall not use improperly, for purposes of competition or personal gain, or pass on to others, any information provided by the BMC as part of the business relationship, regarding plans, technical proposals and business details, including information contained in any electronic data carrier. The Bidder also undertakes to exercise due and adequate care lest any such information is divulged.

7. The Bidder commits to refrain from giving any complaint directly or through any other manner without supporting it with full and verifiable facts.

8. The Bidder shall not instigate or cause to instigate any third person to commit any of the actions mentioned above.

9. The Bidder and their respective officers, employees, agents and advisers shall observe the highest standard of ethics during the Bidding Process. Notwithstanding anything to the contrary contained herein, the Authority may reject an Application without being liable in any manner whatsoever to the Applicant if it determines that the Applicant has, directly or indirectly or through an agent, engaged in corrupt practice, fraudulent practice, coercive practice, undesirable practice or restrictive practice in the Bidding Process

For the purposes of this Clause 9, the following terms shall have the meaning herein after respectively assigned to them:

1. "fraudulent practice" means a misrepresentation or omission of facts or suppression of facts or disclosure of incomplete facts, in order to influence the Bidding Process ;

1. "coercive practice" means impairing or harming or threatening to impair or harm, directly or indirectly, any person or property to influence any persons participation or action in the Bidding Process;

2. "undesirable practice" means (i) establishing contact with any person connected with or employed or engaged by the Authority with the objective of canvassing, lobbying or in any manner influencing or attempting to influence the Bidding Process; or (ii) having a Conflict of Interest; and

3. "Restrictive practice" means forming a cartel or arriving at any understanding or arrangement among Applicants with the objective of restricting or manipulating a full and fair competition in the Bidding Process.

Signature of Tenderer/Bidder

Annexure- C

(On Rs. 500/- Stamp Paper)

DECLARATION CUM INDEMNITY BOND

I, _____ of _____, do hereby declared and undertakeas under.

1. I declare that I have submitted certificates as required to Executive engineer(Monitoring) at the time of registration of my firm/company _____ and there is nochange in the contents of the certificates that are submitted at the time ofregistration.

2. I declare that I _____ in capacity as Manager/Director/Partners/Proprietors of _____ has not been charged with any prohibitory and /or penalaction such as banning(for specific time or permanent)/de-registration or any other actionunder the law by any Government and/or Semi Government and/or Governmentundertaking.

3. I declare that I have perused and examined the tender document includingaddendum, condition of contract, specifications, drawings, bill of quantity etc. formingpart of tender and accordingly, I submit my offer to execute the work as per tenderdocuments at the rates quoted by me in capacity as _____ of _____.

4.I further declare that if I am allotted the work and I failed to carry out the allotted work in accordance with the terms and conditions and within the time prescribed and specified, BMC is entitled to carry out the work allotted to me by any other means at my risk and cost, at any stage of the contract.

5. I also declare that I will not claim any charge/damages/compensation for non availability of site for the contract work at any time.

6. I declare that I will positively make the arrangements of the required equipment on the day of commencement or with respect to the progress of the work in phases, as per the instructions of site in charge

7. I Indemnify Municipal Commissioner and the other officers of BMC or their agents for any Damages, Loss or Injury, any legal suit, proceeding or legal action whatsoever that may because that any time by me or any other staff of our company, for the work undertaken and all such damage, damages, injury or loss, legal suit, legal action, I shall be solely responsible in individual as well as official ca-pacity and such loss, damages, injury shall be made good and/or as the case may be shall be paid immediately by me/company to the satisfaction of the BMC

8. I indemnify BMC and all of its officers against the issues related with dumping sites and the disposal of desilted material as well as any accident/untoward event on site. Neither BMC staff shall be held responsible nor shall BMC be made party in any litigation.

Signature of Tenderer/Bidder

BANKERS GURANTEE IN LIEU OF CONTRACT DEPOSIT

THIS INDENTURE made this _____day of _____ BETWEEN

THE _____BANK incorporated under the English/Indian Companies Acts and carrying on business in Mumbai (hereinafter referred to as 'the bank' which expression shall be deemed to include its successors and assigns)of the first part _____ _____ inhabitants carrying on business at _____ in Mumbai under the style and name of Messer's _____(hereinafter referred to as 'the consultant') of the second part Shri. _____

THE MUNICIPAL COMMISSIONER FOR GREATER MUMBAI (hereinafter referred to as 'the commissioner' which expression shall be deemed, also to include his successor or successors for the time being in the said office of Municipal Commissioner) of the third part and THE BRIHANMUMBAI MUNICIPAL CORPORATION(hereinafter referred to as 'the Corporation') of the fourth part WHEREAS the consultants have submitted to the Commissioner tender for the execution of the work of "_____and the terms of such tender /contract require that the consultants shall deposit with the Commissioner as/contract deposit/ earnest money and /or the security a sum of Rs._____(Rupees _____)AND WHEREAS if and when any such tender is accepted by the Commissioner, the contract to be entered into in furtherance thereof by the consultants will provide that such deposit shall remain with and be appropriated by the Commissioner towards the Security -deposit to be taken under the contract and be redeemable by the consultants, if they shall duly and faithfully carry out the terms and provisions of such contract and shall duly satisfy all claims properly chargeable against them there under AND WHEREAS the consultants are constituents of the Bank and in order to facilitate the keeping of the accounts of the consultants, the Bank with the consent and concurrence of the consultants has requested the Commissioner to accept the undertaking of the Bank hereinafter contained, in place of the contractors depositing with the Commissioner the said sum as earnest money and /or security as aforesaid AND WHEREAS accordingly the Commissioner has agreed to accept such undertaking NOW THIS AGRREMENT WITHNESSES that in consideration of the premises, the Bank at the request of the consultants (hereby testified) UNDERTAKES WITH the commissioner to pay to the commissioner upon demand in writing , whenever required by him , from time to time , so to do ,a sum not exceeding in the whole Rs._____(Rupees_____)under the terms of the said tender and /or the contract .The B.G. Is valid upto _____"Notwithstanding anything what has been stated above, our liability under the above guarantee is restricted to Rs._____only and guarantee shall remain in force upto _____ unless the demand or claim under this guarantee is made on us in writing on or

before _____all your right under the above guarantee shall be forfeited and we shall be released from all liabilities under the guarantee thereafter"

IN WITNESS WHEREOF

WITNESS(1) _____

Name and _____

address _____

WITNESS(2)_____

Name and _____ the duly constituted Attorney Manager

address _____

the Bank and the said Messer's _____

_____ (Name of the Bank)

WITNESS(1)_____

Name and _____

address _____

WITNESS(2)_____

Name and _____

For Messer's _____

address _____

have here into set their respective hands the day and year first above written.

The amount shall be inserted by the Guarantor, representing the Contract Deposit in Indian Rupees.

Annexure- D

Rate Analysis

Item Description

Sr.No.	Description of rate analysis parameters	Unit	Quantity	Rate	Amount
1	Basic Material (Rate should be inclusive of all taxes)				
2	Machinery Hire Charges				
3	Labour Type		(labour components)		
4	Total of all components				
5	Overhead &Profit 15% on 4				
6	Total Rate (4+5)				
7	Per unit rate				

Sign & Seal of the Tenderer

Annexure- E

Each tenderer shall upload scanned copy of an undertaking on stamp paper of Rs. **500**/- as per proforma given below, in packet "B". The undertaking shall be submitted in physical format within seven days from the date of issue of work order, if the tender is awarded to the bidder.

"I/We …….……(full name in capital letters, starting with surname) , the Proprietor / Managing Partner / Managing Director / Holder of the Business/Manufacturer/Authorized Dealer, for the establishment /firm/registered company, named herein below, do hereby state and declare that I/We…….

whose names are given herein below in details with the addresses have not filled in this tender under any other name or under the establishment / firm or otherwise, nor are we in any way related or concerned with any establishment, firm or any other person, who have filled in the tender for the aforesaid work".

I/We hereby further undertake that we have offered the **best prices** for the subject supply / work as per the present market rates. Further, we do hereby undertake and commit that we have not offered / supplied the subject product / similar product / systems in the past one year in Maharashtra state for quantity variation up to -50% / + 10% at a price lower than that offered in the present bid to any other outside agencies including Govt./semi Govt. agencies and withinB.M.Calso. Further, we have filled in the accompanying tender with full knowledge of the above liabilities and therefore we will not raise any objection or dispute in any manner relating to any action, including forfeiture of deposit and blacklisting, for giving any information which is found to be incorrect and against the instructions and directions given in this behalf in this tender.

I/We further agree and undertake that in the event it is revealed subsequently after the allotment of work / contract to me / us, that any information given by me / us in this tender is false or incorrect, I / We shall compensate the Brihanmumbai Municipal Corporationfor any such losses or inconvenience caused to the Corporation in any manner and will not raise any claim for such compensation on any ground whatsoever. I / We agree and undertake that I / We shall not claim in such case any amount, by way of damages or compensation for cancellation of the contract given to me / us or any work assigned to me / us or as withdrawn by the Corporation."

Annexure 'F'

Tax

GST and other state levies/cess which are not subsumed under GST will be applicable. The tenderer shall quote inclusive of all taxes. It is clearly understood that BMC will not bear any additional liability towards payment of any Taxes & Duties.

Wherever the services to be provided by the tenderers falls under **Reverse Charge Mechanism**, the price quoted shall be exclusive of GST, but inclusive of Taxes/ Duties/ Cess other than GST, if any.

The tenderer shall mandatorily upload the information of applicable tax in the pro-forma as enclosed under '**special Annexure-I**' given below in '**C**' folder. Wherein the tenderer shall indicate in the tabular format all the applicable taxes and their percentages and the tax amount considered while quoting the tender.

Rates accepted by BMC shall hold good till completion of work and no additional individual claim shall be admissible on account of fluctuations in market rates, increase in taxes / any other levies / tolls etc. except that payment / recovery for overall market situation shall be made as per price variation.

SPECIAL ANNEXURE-I

S R. N O.	SAC/HSN Code	Item/Work Description	Amount inclusive of all taxes and duties	BIDDER TO INDICATE THE AMOUNT OF APPLICABLE TAXES.								
				CGST		SGST		IGST		OTHER TAXES IF ANY		TOTAL AMOUNT OF TAXES
				%	Amount	%	Amount	%	Amount	%	Amount	
GRAND TOTAL												

Annexure –G

- **PROFORMA FOR THE UNDERTAKING TO BE SUBMITTED BY THE TENDERER (ON THEIR LETTERHEAD)**

Date: _____

To,
The Municipal Commissioner,
Brihanmumbai Municipal Corporation (BMC),
Mumbai.

Sub: _____

Sir,

We, the undersigned hereby undertake that

1. All Asphalt Works required to be done under the captioned contract work shall be got executed with the specified asphalt mixes manufactured in B.M.C. Approved Asphalt Plants only.

2. All the Paver blocks required for the Paver block works to be carried out under the captioned contract work shall be procured from the specified manufacturers approved with B.M.C.

3. The R.M.C. works required to be done under the captioned contract work shall be got executed with the specified R.M.C. mixes supplied by B.M.C. Approved R.M.C. plants only.

4. All the pipes/ specials required for the works will be procured from the manufacturer approved withB.M.Conly.

5. All the M.S pipes/ specials will be fabricated from B.I.S. approved Company/ I.S.O 9000 Certified Company, confirmed to I.S 3589, I.S 2062.

6. All the Air valves, Sluice valves & the Butterfly Valves will be procured from the Company approved with B.M.C.

7. All the observations & instructions made by the quality assurance agency appointed if any for the tender work are binding on us and same will be complied immediately.

Yours Faithfully,

Signature

Rubber Stamp.

Annexure –H

Information regarding status of tender (s)
(To be submitted on Tenderers letter head)

1 a) whether it is proprietary concern?

_____

b) If so, name of the owner

_____

If it is partnership concern, please furnish name and address of each partner and copy of registration certificate.

2. In case of Company, please furnish documentary proof to show that the Company registered.

Signature of authorized person of

Concern/ Company.

Annexure –I

Irrevocable Undertaking

(Notarized on Rs. 500/- Stamp Paper)

I Shri/ Smt……aged,…….years Indian Inhabitant. Proprietor/ Partner/ Director of M/s ……resident at ……..do hereby give Irrevocable Undertaking as under;

1) I Say & undertake that as specified in section 171 of CGST Act, 2017, any reduction in rate of tax on supply of goods or services or the benefit of input tax credit shall be mandatorily passed on to BMC by way of commensurate reduction in prices.
2) I further say and undertake that I understand that in case the same is not passed on and is discovered at any later stage, BMC shall be at liberty to initiate legal action against me for its recovery including, but not limited to, an appeal to the Screening Committee of the GST Counsel.
3) I say that above said irrevocable undertaking is binding upon me/ my partners/ company/ other directors of the company and also upon my/ our legal heirs, assignee, Executor, administrator etc.
4) If fail to compliance with the provisions of the GST Act, I shall be liable for penalty/ punishment or both as per the provisions of GST Act.

Whatever has been stated here in above is true & correct to my/our own knowledge & belief.

Solemnly affirmed at DEPONANT

THIS DAY OF BEFORE ME

PROFORMAS:

A) PROFORMA- I

The list of similar works as stated in para 'A' of Post qualification during last seven years–

PROFORMA- I						
Sr.No.	Name of the Project	Name of the employer	Stipulated date of completion	Actual date of completion	Actual Cost of work done (in Lakhs)	Certifying Authority
1	2	3	4	5	6	7

NOTE:

a. Scanned Attested copies of completion/performance certificates from the Engineer-in-Charge for each work should be annexed in the support of information furnished in the above proforma.

b. Works shall be grouped financial year-wise.

B) PROFORMA- II

Audited annual turnover of Civil Engineering Construction Works during the last five years.

PROFORMA- II					
Sr.No.	Financial year	Annual Turnover of Civil Engineering Works	Updated value to current year	Average of last 5years	Page No.
1					
2					
3					
4					
5					
Total					

NOTE: The above figures shall tally with the audited balance sheets uploaded by the tenderers duly certified by Chartered Accountant.

C) PROFORMA- III

At least similar work, as stated in para 'A' of Post qualification,

PROFORMA- III							
Name of the Project	Name of the Employer	Cost of the Project	Date of issue of work Order	Stipulated Date of Completion	Actual Date of Completion	Actual cost of work done	Remarks explaining reasons for delay, if any
1	2	3	4	5	6	7	8

Note: Scanned Attested copies of completion/performance certificates from the Engineer-in-charge for each work should be annexed in support of information furnished in the above proforma.

D) PROFORMA- IV

PERSONNEL:

PROFORMA- IV					
Sr. No.	Post	Name	Qualification	Work Experience	
		(Prime Candidate/ Alternate)		No. of Years	Name of Projects
1	Project Manager				
2	Quality Control Engineer				
3	Site Engineer				
4	Site Supervisor				

NOTE: Scanned Attested copies of qualification certificates and details of work experience shall be submitted /uploaded.

E) PROFORMA- V

MACHINERY:

a) ~~for special work~~

~~PROFORMA- V/A~~			
~~Sr.No.~~	~~Equipment~~	~~Number~~	~~Owned/Leased/Assured access~~
~~1~~	~~2~~	~~3~~	4

~~PROFORMA- V/B~~			
~~Sr.No.~~	~~Equipment~~	~~Number~~	~~Owned~~
~~1~~	~~2~~	~~3~~	4

~~**Note:** The tenderer(s) shall furnish/upload the requisite Scanned Attested documents of ownership/leased of machineries. The undertaking from the suppliers will not be accepted.~~

b) For ~~Routine work~~/New & Original Works

The tenderer(s) to qualify this bid shall either own equipments, in full working order, as listed below, or must demonstrate that based on known commitments, they will be available for timely use in the proposed contract as specified in Equipment Capability

PROFORMA V/C			
Sr.No	***Equipments owned / access to***	***Requirements (No)***	***RTO Vehicle nos / Invoice no.***
1	***2***	***3***	***4***
01	Laser guided micro tunneling machines		
02	Ground improvement equipment		
03	Well sinking equipment		
04	Mobile Crane 100 tons capacity		
05	Excavator (5 ton)		
06	Generator 200KVA (440Volts)		
07	Drainage Pumps 20Kw & 10Kw		
08	Buried Services Locator.		
09	Grouting pump (min 200psi pressure)		
10	Portable Generator (minimum 40KVA		
11	Pumps for dewatering		
12	Submersible pumps for dewatering		
13	Rock breaker with compressor		
14	Crane		
15	Pipe cutter		
16	Ratchet Drilling machine		
17	Roller Vibratory Min. 10T		
18	Welding set.		
19	Compressor		
20	Transit Mixer (Tilted)		
21	J.C.B.		
22	Excavator / Poclain		
23	Dumper / Trucks 8 Cu.m capacity		
24	Dumper / Trucks 4 Cu.m capacity		
25	C.C.T.V. Camera		
26	Mobile D.G.set		
27	Plate Vibrator		
28	Flow meter		
29	Open body trailer		
Note: ~~The tenderer(s) shall furnish/upload the requisite Scanned Attested documents of owner-ship/leased of machineries.The undertaking from the suppliers will not be accepted.~~			

F) **PROFORMA - VI**

Details of Existing Commitments and ongoing works –

PROFORMA - VI / A							
Description of work	Place	Contract No. & Date	Name & Addresses of employer	Value of Contract in Rs.	Scheduled date of completion	Value of work remaining to be completed	Anticipated Date of completion
1	2	3	4	5	6	7	8

Note: Scanned Attested copies of completion/performance certificates from the Engineer-in-Charge for each work should be annexed in the support of information furnished in the above proforma.

Details of works for which bids are already uploaded –

PROFORMA - VI / B						
Description of work	Place	Name & Addresses of employee	Value of Contract in Rs.	Time Period	Date on which decision is expected	Remarks
1	2	3	4	5	6	7

Note: Scanned Attested copies of certificates from the Engineer-in-charge for each work shall be annexed.

~~**PROFORMA VII :**~~**DELETED**

~~***Maximum Quantity of total Pavement Quality Concrete (M35 or richer mix)*** on volumetric basis in Cu.m, ***completed in one single contract during the last seven(7) financial /calendar years***~~

~~***Year***~~	~~***Name of the Works***~~	~~***Name of the Employers***~~	~~***Quantity of Concrete (M 35 or richer mix) (Cum)***~~	~~***Remarks***~~
~~***1***~~	~~***2***~~	~~***3***~~	~~***4***~~	~~***5***~~

G) PROFORMA VIII

The tenderer to qualify this bid shall own or have assured access (through hire, lease, and other commercial means) in full working order, to the equipment's as listed below, and must demonstrate that based on known commitments, they will be available for timely use in the proposed contract.

Sr.No	***Equipment***	***No***
1	***2***	***3***
1	Computerized Batch mix Asphalt Plant Capacity min. 80 M.T per hr. with valid registration of B.M.C.	
2	R.M.C Plant (computerized) – Capacity 60 Cu.m per hr. (or two nos. of 30 Cu.m. per hr. in lieu of 60 cum per hr.) with valid registration of B.M.C.	
3	Paver Blocks (BIS Certified) manufacturing factory approved byB.M.Cwith valid registration.	

NOTE: a) The minimum suggested major equipment's to begin with for execution of works in accordance with the prescribed construction schedule are shown in the above list. The contractor shall mobilize prior to bidding of this bid and mandatorily during the contract implementation, additional equipment as directed by Engineer-in-charge.

H) PROFORMA IX

Information on Litigation History in which the tenderer is involved.

Other Party (ies)	*Employer*	*Cause of Dispute*	*Amount involved*	*Remarks showing Present Status.*
1	*2*	*3*	*4*	*5*

Note: Scanned Attested copies of completion/performance certificates from the Engineer-in-charge for each work should be annexed and uploaded.

I) PROFORMA – X

Information of certificate issuing authorities

Sr.No.	*Employer/Name of issuing Authority*	*Designation of issuing Authority*	*E-mail ID of issuing Authority*	*Contact numbers of issuing Authority*

~~**J) PROFORMA – XI** : DELETED.~~

~~***INFORMATION ABOUT INSTALLATION OF SCADA ETC.***~~

~~MANDATORY REQUIREMENT FOR REGISTERED/ASSURED PLANTS REQUIRED AND TO ALL MACHINERIES OWNED/ASSURED REQUIRED.~~

~~***MANDATORY REQUIREMENT*:**~~

~~***Particulars***~~	~~***Whether Installed***~~	~~***Copies of Certification of installer company enclosed.***~~
	~~***Yes / No***~~	~~***Yes/ No***~~
~~*1*~~	~~*2*~~	~~*3*~~
~~Intelligent Compaction system – compatible for L&T, Escort, JCB, Greaves or equivalent make Compactors.~~		
~~Agent Software for Compactor~~		
~~Batch Mix Plant SCADA Automation~~		
~~Software Agent Batch Mix Plant connectivity~~		
~~Software agent RMC plant connectivity~~		
~~Vehicles Tracking System with automation loading unloading Switch~~		
~~Vehicles Tracking System – Per month Subscription charges~~		
~~SCADA Automation for ICPB Factory~~		

~~**Note:- Intending tenderer shall give undertaking to provide the information on SCADA as required in PROFORMA – X.**~~

SECTION 15

CIRCULARS

MUNICIPAL CORPORATION OF GREATER MUMBAI

No. : MGC/F/6565 dtd. 25-9-2018

CIRCULAR

Sub : Setting up the parameters of litigation history of the bidders.

As approved by Hon'ble M.C., the clause of litigation history be included as part of SBD as below :-

1) The bidder shall disclose the litigation history in Packet 'B' under the head "Details of Litigation History".

If there is no Litigation History, the bidder shall specifically mention that there is no Litigation History against him as per the clause of Litigation History. In case there is Litigation History -

Litigation History must cover – Any action of blacklisting, debarring, banning, suspension, deregistration and cheating with MCGM, State Govt., Central Govt. or any authority under State or Central Govt./Govt. organisation initiated against the company, firm, directors, partners or authorized signatory shall be disclosed for last 5 years from the date of submission of bid. Also, bidder must disclose the litigation history for last 5 years from the date of submission of bid about any action like show cause issued, blacklisting, debarring, banning, suspension, deregistration and cheating with MCGM and MCGM is party in the litigation against the company, firm, directors, partners or authorized signatory for carrying out any work for MCGM by any authority of MCGM and the orders passed by the competent authority or by any Court where MCGM is a party. While taking decision on litigation history, the concerned Chief Engineer or D.M.C. or Director, as may be the case, should consider the details submitted by bidder and take decision based on the gravity of the litigation and the adverse effect of the act of company, firm, directors, partners or authorized signatory on the MCGM works which can spoil the quality, output, delivery of any goods or any work execution and within the timeframe.

2) The litigation history shall be treated as curable defect and hence, the portion/clause of SBD, (C) Bid Capacity at Pg. 15 & in the chapter of 'Instructions to Applicants' at Pg. 31 of the SBD will be now corrected by deleting the word litigation history and shall be read as below.

C) Bid Capacity :

The bid capacity of the prospective bidders will be calculated as under: Assessed Available Bid Capacity = (A* N* 2 - B)

Where,

A = Maximum value of Civil Engineering works executed in any one year (year means Financial year) during the last five years (updated to the price level of the Financial year in which bids are received at a rate of 10% per year) taking into account the completed as well as works in progress.

N = Number of years prescribed for completion of the Project/Works, excluding monsoon period, for which these bids are being invited. (E.g. 7 months = 7/12 year). For every intervening monsoon, 0.33 shall be added to N.

B = Value of existing commitments (only allotted works) on the last date of submission of bids as per bidding document and on-going works to be completed during the period of completion of the Project/Works for which these bids are being invited.

Note: The statement showing the value of existing commitments and on-going works as well as the stipulated period of completion remaining for each of the works listed should be attached along with certificates duly signed by the Engineer-in Charge, not below the rank of an Executive Engineer or equivalent.

Even though the bidders meet the above qualifying criteria, they are subject to be disqualified if they have:

- made misleading or false representation in the forms, statements and attachments submitted in proof of the qualification requirements; and/or
- Record for poor performance such as abandoning the works, not properly completing the contract, inordinate delays in completion, litigation-history, or financial failures etc."

All the concerned are directed to implement the above directions with immediate effect.

Director (E. S. & P.)

City Engineer/Ch.Eng.(Roads & Traffic) / Ch.Eng. (Bridges) / H. E. / Ch.Eng. (WSP) /Ch.Eng.(S.P.) /Ch.Eng(S.Q.)/ Ch.Eng.(MSDP) / Ch.Eng. (BM) / Ch.Eng.(Vig) / Ch.Eng. (M&E) / Ch.Eng.(D.P.)/Ch.Eng.(SWD) / Ch.Eng. (Coastal Road) / Ch.Eng.(SWM) / Ch.Eng.(CTIRC)/Dy. Ch.Eng.(HIC) / Dy.Ch.Eng.(SIC), Supt. of Gardens/

Asstt. Comm. Ward / Asstt. Comm.(Markets) / Asstt. Comm. (Estate) / Asstt. Comm.(Planning) / Asstt. Comm.(R.E.) City/W.S./E.S.

No. DIR/ES & P/915/MC dtd. 27-9-2018

C.C. to : DMC(MCO)/ DMC (Imp.) / DMC(GA)/ DMC(Vig)/ DMC(SE) / DMC(E)/ DMC(CPD)/ DMC(SWM)/DMC (Education)/DMC (RE)/ DMC(PH)/ DMC(Z-I) / DMC(Z-II) / DMC(Z-III) / DMC(Z-IV) / DMC(Z-V)/ DMC(Z-VI)/ DMC(Z-VII) / C.A. (F) / C.A. (WSSD) / C.A. (C.P.D.) / Law Officer

Forwarded for information please.

Director (E.S.& P.)

No. No. DIR/ES & P/915/MC dtd. 27-9-2018

C.C. to:

Submitted please.

Director (E.S.& P.)

A.M.C.(City) / A.M.C.(E.S.) / A.M.C(W.S) / A.M.C(P)

Sir/Madam,

Municipal Corporation of Greater Mumbai

No. Dy.Ch.Eng./SWM/3957/Op. dt. /09/2018

CIRCULAR 28-9-2018

Subject: Implementation of the Construction and Demolition Waste Management Rules, 2016

Reference: i) Hon'ble Supreme Court's order in the Special Leave Petition (civil) No. D 23708/2017, dated 15/03/2018
ii) Hon'ble M.C. Sir's Approval u/no. MGC/F/7076 dtd. 30.08.2018

The Construction and Demolition Waste Management Rules, 2016 is applicable to **'every waste resulting from construction, re-modeling, repair and demolition of any civil structure of individual or organisation or authority who generates construction and demolition waste such as building materials, debris, rubble'.**

Hon'ble Supreme Court vide order dated 15/03/2018, has directed to dispose of construction and demolition waste material by following due procedure in accordance with the provisions of the Construction and Demolition Waste Management Rules, 2016'".

In order to put curb on the un-authorisedly dumped waste, it is essential to control it by asking ward Maintenance department or any MCGM department to issue work-permission only after assessing the total estimated quantity of C&D waste likely to be generated out of the repairs / construction / trenching work or any such civil works, and asking them to make payment in advance or in stages of waste generation for the 'Debris on Call' system or transport C&D waste to designated unloading site.

Following standard operating procedure is proposed to be adopted:

1) MCGM department like A. E. (Maintenance), A. E. (B&F), H.E., S.O., S.P., M.S.D.P., W.S.P., S.W.D., S.W.M., C.E., B.C., B.M., Roads, Bridges, etc. carrying out civil work / repairs works etc. shall put condition in the tender / quotation / work order to dispose of C&D waste generated either by (i) 'Debris on Call' scheme if generation of C&D waste is less than 300MT for entire project or (ii) contractor shall transport to designated unloading site approved by MCGM S.W.M. department by following due procedure if C&D waste is more than 300MT for entire project.
2) The estimated quantity of the C&D waste generated shall be certified by A.E. (Maintenance) Ward or the concerned department.
3) If quantity of C&D waste is less than 300MT, A. E. (S.W.M.) Ward will issue Challan for making payment as per 'Debris on call' scheme on approval from Zonal Ex. Eng. (S.W.M.).
4) If quantity of C&D waste is more than 300MT, the contractor / agency will submit C&D waste management plan complete with requisite documents to Zonal Ex. Eng. (S.W.M.). On approval, the contractor / citizen / agency carrying out the civil works will be allowed to transport the C&D waste material to the designated unloading site.
5) The contractor / citizen / agency carrying out the civil works shall maintain & submit the appropriate record like date, quantity of C&D waste transported, vehicle No., Challan of Receipt of C&D waste from unloading site etc.
6) The whole system of issuing NOC for C&D waste transportation and payment will be made ONLINE and for this M/S. Softech will be asked to develop appropriate software on the basis of existing norms being done for auto-DCR portal.
7) The proposals will be processed manually till the complete system fully operational online.
8) All the contractors / agencies using designated unloading site must maintain proper record of the C&D waste generated and transported along with date and vehicles through which C&D is transported & the copies of Challans from unloading site for having unloaded the C&D waste and submit the same to A.E. (S.W.M.) ward through concerned department.

Sd/-07/08/2018	Sd/-07/08/2018	Sd/-10/08/2018	Sd/-29/08/2018
Ch. Eng. (S.W.M.)	D.M.C. (S.W.M.)	A.M.C.(E.S.)	Municipal Commissioner

Forwarded for information and compliance please

Dy. Ch. Eng. (SWM) Op.

D:\Online C&D Details\Unauthorised C&D waste.docx

Scanned by CamScanner

Scanned with CamScanner

MUNICIPAL CORPORATION OF GREATER MUMBAI

No. 1 MGC/F/8659 Dtd. 07.09.2019.

Sub : Arbitration clause in the Standard General Conditions of Contract for Construction Works, 2016.

In one of the cases of W.S.P. regarding arbitration dispute, a note was submitted by Dyt aw Officer (High Court, Suit & PIL) and subsequently the report is submitted by Jt. M.C. (Vig.) vide No. Jt.M.C./Vig./69/MC dtd. 21-8-2019 proposing a process to deal with the arbitration matters as per the Law & Judiciary, Govt. of Maharashtra, policy for Institutional arbitration vide it's G.R. dtd. 13-10-2016 and the report submitted by Jt. M.C. (Vig.) is approved by Hon'ble M.C. on 17-8-2019.

There is a provision of arbitration clause in the Standard General Condition of Contract for Construction Works, point no. 13 (e) reads as follows :-

13.e) Arbitration and Jurisdiction:

If the Commissioner shall fail to give notice of the decision as aforesaid within a period of 90 days after being requested as aforesaid, or if the Contractor be dissatisfied with any such decision, then and in any such case the Contractor may within 90 days after receiving notice of such decision or within 90 days after the expirations of the first named period of 90 days (as the case may be) require that the matter or matters in dispute be referred to arbitration as hereinafter provided. All disputes or differences in respect of which the decision (if any) of the Commissioner has not become final and binding as aforesaid shall be finally settled by arbitration as follows:

Arbitration shall be effected by a single arbitrator agreed upon the parties. The arbitration shall be conducted in accordance with the provisions of the Arbitration Act, 1996 or any statutory modifications thereof, and shall be held at such place and time within the limits of Brihan Mumbai as the arbitrator may determine. The decision of the arbitrator shall be final and binding upon the parties hereto and the expense of the arbitration shall be paid as may be determined by the arbitrator. Performance under the Contract shall, if reasonably be possible, continued during the arbitration proceedings and payment due to the Contractor by the Employer shall not be withheld unless they are the subject matter of arbitration proceedings. The said arbitrator shall have full power to open up, review and revise any decision, opinion, direction, certification or valuation of the Commissioner and neither party shall be limited in the proceedings before such arbitrator to the evidence or arguments put before the Commissioner for the purpose of obtaining his said decision.

No decision given by the Commissioner in accordance with the foregoing provisions shall disqualify him from being called as a witness and giving evidence before the arbitrator on any matters whatsoever relevant to the disputes or difference referred to the arbitrator as aforesaid.

All awards shall be in writing and for claims equivalent to 5,00,000 or more such awards shall state reasons for amounts awarded. The expenditure of arbitration shall be paid as may be determined by arbitrator.

In case of any claim, dispute or difference arising in respect of a contract, the cause of action thereof shall be deemed to have arisen in Mumbai and all legal proceedings in respect of any claim, dispute or difference shall be instituted in a competent court in the City of Mumbai only.

As per Hon'ble M.C's approval dtd. 17-8-2019, the existing clause is now replaced as follows :

13.e Arbitration and Jurisdiction

If the Commissioner fails to give notice of the decision as aforesaid within a period of 90 days after being requested as aforesaid or if the Contractor is dissatisfied with any such decision, then the Contractor may within 90 days after receiving notice of such decision or within 90 days after the expiration of the first named period of 90 days (as the case may be) require that the matter or matters in dispute be referred to arbitration as hereinafter provided.

i) In case of a contract where the contract price and/ or contract value is less than Rs. 5,00,00,000/- (Rupees Five Crore Only), any dispute arising out of or in connection with this contract, including any question regarding its existence, validity or termination, shall be referred to a mutually agreed arbitral tribunal in accordance with the Arbitration and Conciliation Act, 1996 (amended upto date). The arbitral tribunal shall consist of a sole arbitrator, as mutually agreed upon by the parties and the said dispute shall be finally resolved by the said aribtral tribunal. The decision of the arbitral tribunal shall be in writing (with reasons) and which will be final and binding upon the parties hereto and the expenses of the arbitration shall be paid as may be determined by the arbitrail tribunal. The seat of the arbitration shall be Mumbai. The venue of arbitration shall be within the limits of Brihan Mumbai. The language of the Arbitration shall be English.

If the parties fails to appoint mutually agreed arbitral tribunal, within the period of 30 days from the date of application seeking arbitration in the dispute,

the arbitral tribunal shall be appointed by the recognised arbitral institution i.e. Mumbai Centre for International Arbitration (approved by Government of Maharashtra under G.R. no. ARB/Case No. 1/2017/D-19 dtd. 28.02.2017) as per the Arbitration Rules of the Mumbai Centre for International Arbitration then in force ("MCIA Rules").

(ii) In case of contract where the contact price and/ or contract value is Rs.5,00,00,000/- (Rupees Five Crore Only) or more, any dispute arising out of or in connection with such a contract, including any question regarding its existence, validity or termination, shall be directly referred to and finally resolved by the recognized arbitral institution i.e. Mumbai Centre for International Arbitration (approved by Government of Maharashtra under G.R. no. ARB/Case No. 1/2017/D-19 dtd. 28.02.2017) as per the Arbitration Rules of the Mumbai Centre for International Arbitration then in force ("MCIA Rules"). The arbitral tribunal shall consist of a sole arbitrator. The seat of the arbitration shall be Mumbai. The language of the Arbitration shall be English.

In either case, the law governing this arbitration agreement and the contract shall be Indian Law.

All the HoDs are hereby directed to note the revised clause in G.C.C. as mentioned above and ensure that the same is included in the tenders invited from 15-1-2019 onwards. If the tenders are already invited before 15-1-2019 and the Packet 'A' is not opened, then the corrigendum shall be issued so as to see that all the new tenders accepted/invited after 15-9-2019 shall include this revised condition and will become a part of the contract for all such works.

Sd/-22.08.2019
Dir. (E.S. & P.)

Sd/-29.08.2019
A.M.C. (P)

Sd/-06.09.2019
M.C.

No.. : DIR/ES&P/919/MC dtd. 16.09.2019.

Copy to :

Asstt. Comm. ८ ते ७ Ward / City Engineer/Ch.Eng.(Roads & Traffic) / Ch.Eng. (Bridges) / H. E. / Ch.Eng. (WSP) /Ch.Eng.(S.P.) / Ch.Eng.(MSDP) / Ch.Eng. (BM) / Ch.Eng.(Vig) / Ch.Eng. (M&E) / Ch.Eng.(D.P.)/Ch.Eng.(SWD) / Ch.Eng.(SWM) / Ch.Eng.(CTIRC)/Ch.Eng. (Coastal Roads) / Dy. Ch.Eng.(HC) / Dy.Ch.Eng.(SIC), Supdt. of Gardens / CA (F) / CA (WSSD)/ CA (CPD)

Forwarded for information and necessary action please.

Director (E. S. & P.)

No.. : DIR/ES&P/919/MC dtd. 16.09.2019.

C.C. to : DMC(MCO)/ Jt.MC(GA)/ DMC(SE) / DMC(E)/ DMC(CPD)/ Jt.MC(SWM)/ DMC(Z-I) / DMC(Z-II) / DMC(Z-III) / Jt.MC(Z-IV) / Jt.MC(Z-V)/ DMC(Z-VI)/ Jt.MC(Z-VII) / D.M.C. (PH) / DMC (Edu.) / DMC (RE) / DMC (DM)

Forwarded for information please.

Director (E.S.& P.)

No.. : DIR/ES&P/919/MC dtd. 16.09.2019.

C.C. to: Law Officer

For compliance of para 'Y' at Pg. N/35 at your end and do the needful as per Hon'ble M.C.'s order. Original file is forwarded herewith.

Director (E.S.& P.)

No.. : DIR/ES&P/919/MC dtd. 16.09.2019.

C.C. to:

As per the note of Law Officer u/no. LO/LOP/3110/ Dy.LO (H.C. suits & PIL) dt.28.08.2019, the clause as modified by Law Officer & which is approved by Hon'ble M.C. is included in the circular please while issuing the circular.

Submitted please.

Director (E.S.& P.)

Jt.MC(Vig)/A.M.C.(City) / A.M.C.(E.S.) / A.M.C(W.S) / A.M.C(P)

Sir/Madam,

Hon'ble M.C.

Sir,

महाराष्ट्र शासन

क्रमांक : बीसीसी २०१९/प्र.क्र.५७८ अे/१६-ब
सामान्य प्रशासन विभाग, मंत्रालय,
हुतात्मा राजगुरु चौक, मादाम कामा मार्ग,
मुंबई -४०००३२.
दिनांक : १ जानेवारी, २०२०.

प्रति,
आयुक्त,
बृहन्मुंबई महानगर पालिका,
मुंबई.

MC/City/.....1/04
18/1/2020

A.M.C. (City)

पू.क.अ.
पुढील कार्यवाहीसाठी

सह आयुक्त
(सामान्य प्रशासन)

विषय : सांविधानिक अनुसूचित जाती/ जमाती व इतर मागासवर्गीयांसाठी नोकरीमध्ये असलेल्या आरक्षण धोरणाची अंमलबजावणी करणेबाबत.

महोदय,

उपरोक्त विषयाबाबतची श्री.सुधीर बंडू जाधव, समाजसेवक यांच्या दि.२.१२.२०१९ च्या निवेदनाची प्रत सोबत जोडली आहे. N.R.

२. श्री.जाधव यांनी उपरोक्त निवेदनाद्वारे बृहन्मुंबई महानगरपालिकेमार्फत निविदेद्वारे करण्यात येणाऱ्या ४५ दिवसांपेक्षा अधिक कालावधीच्या कामासाठी आरक्षण अधिनियमानुसार मागासवर्गीय उमेदवारांना आरक्षण देण्याबाबतची विनंती केलेली आहे.

३. महाराष्ट्र राज्य लोकसेवा (अनुसूचित जाती, अनुसूचित जमाती, निरविसूचित जमाती (विमुक्त जाती), भटक्या जमाती, विशेष मागास प्रवर्ग आणि इतर मागासवर्ग यांच्यासाठी आरक्षण) अधिनियम, २००१ च्या कलम ३ नुसार ४५ दिवसांपेक्षा अधिक कालावधीसाठीच्या तात्पुरत्या नियुक्त्यांसाठी, सदर आरक्षण लागू केलेले असल्याने त्यानुसार उचित कार्यवाही करण्याचे संबंधितांना निदेश द्यावेत, ही विनंती.

आपला,

(र. अं. खडसे)
अवर सचिव, महाराष्ट्र शासन

बृहन्मुंबई महानगरपालिका
आयुक्तांचे कार्यालय
15 FEB 2020
समय ११, १२, १३, १४, १५, १६, १७, १८,
क्रमांक MCR/6803/
C:\pooja\संक्रमण.doc

42293 - 2020 - 21 - 400 Copy

Scanned with CamScanner

बृहन्मुंबई महानगरपालिका
सामान्य प्रशासन विभाग
क्र.सा.मबीसी/६९१३ दि. १०.०३.२०२० ५/५/२०२०

परिपत्रक

विषय: संवैधानिक अनुसूचित जाती व जमाती व इतर मागासवर्गीय यांच्यासाठी नोकरीमध्ये असलेल्या आरक्षण धोरणाची अंमलबजावणी करणे बाबत.

संदर्भ: क्र.बीसीसी २०१९/प्र.क्र.५७८/ए/१६-ब दि.०१.०१.२०२०

सोबत जोडलेले, अवर सचिव, महाराष्ट्र शासन यांचे पत्र क्र.बीसीसी २०१९/प्र.क्र.५७८/ए/१६-ब दि.०१.०१.२०२० सर्व खाते प्रमुख/विभाग प्रमुख यांच्या माहितीकरीता व योग्य त्या कार्यवाहीकरीता निर्गमित करण्यात येत आहे.

सदर पत्रातील निर्देशांनुसार बृहन्मुंबई महानगरपालिकेमार्फत निविदेद्वारे करण्यात येणाऱ्या ४५ दिवसांपेक्षा अधिक कालावधीसाठीच्या कामांसाठी महाराष्ट्र राज्य लोकसेवा (अनुसूचित जाती, अनुसूचित जमाती,विमुक्त जाती,भटक्या जमाती,विशेष मागास प्रवर्ग आणि इतर मागास वर्ग यांच्यासाठी आरक्षण) अधिनियम २००१ च्या कलम ३ नुसार ४५ दिवसांपेक्षा अधिक कालावधीसाठीच्या तात्पुरत्या नियुक्त्यांसाठी, सदर आरक्षण लागू केलेले आहे. त्यानुसार ४५ दिवसांपेक्षा अधिक कालावधीसाठीच्या तात्पुरत्या नियुक्त्यांसाठी आरक्षणाचे नियम लागू करण्याची कार्यवाही खातेस्तरावरुन करण्यात यावी.

सर्व खाते/विभाग प्रमुखांना सूचित करण्यात येते की,शासनाच्या क्र.बीसीसी २०१९/प्र.क्र.५७८/ए/१६-ब दि.०१.०१.२०२० रोजी दिलेल्या शासन निदेशांची अंमलबजावणी काटेकोरपणे करण्यात यावी.

सही/-	सही/-	सही/-	सही/-
दि.११.०३.२०२०	दि.१२.०३.२०२०	दि.१३.०३.२०२०	दि.१९.०३.२०२०
सह प्रमुख कर्मचारी अधि.	प्रमुख कर्मचारी	सह आयुक्त	अति.आयुक्त
(मागासवर्ग कक्ष)	अधिकारी	(सामान्य प्रशासन)	(शहर)

प्रकअ/ ७५ /सर्वसा/एमसी/३०४
06 JUL 2020 २०१९-२०२०

मनपा आयुक्तांचे कार्यालय
क्र.एमबीसी/६९१३
दि.१३.०५.२०२०

684 अव आर

प्रत ---------- यांना माहितीकरिता व योग्य त्या कार्यवाहीकरिता सदर परिपत्रकाची प्रत महानगरपालिकेच्या उपयुक्त अग्रेषित.
http://45.249.109.226/circular/GAD/G-PO/BCCell या संकेतस्थळावर उपलब्ध आहे.
सोबत: क्र.बीसीसी २०१९/प्र.क्र.५७८/ए १६-ब दि.०१.०१.२०२०

ADC

सह प्रमुख कर्मचारी अधिकारी (मा.व.क.)

5/5/2020

J - 42293 (1-2)

Scanned with CamScanner

MUNICIPAL CORPORATION OF GREATER MUMBAI

CIRCULAR
2019-20
No. CA(F)/EXP/FI/21 dated 30.09.2019

Sub: A Running / final bill of project work shall be accompanied with GIS mapping certificate.

With the aim of avoiding duplication of works in the same geography within MCGM, it has been decided to integrate SAP Project Systems (PS) module with Geographical Information System (GIS) to map all the civil works on GIS and link payment with the actual progress on map.

The whole objective has been divided into two phases. In first phase of development, integration of GIS with SAP PS module for 6 departments (Roads & Traffic, Bridges, Sewerage Operations, Storm Water Drains, Hydraulic Engineering and Sewerage Projects) for mapping of all Civil works in GIS. In this, WBS elements of various works of these six departments will be released and in turn Purchase (Work) Order in project system module will be created only after the works are mapped on GIS. Phase I application has been made live w. e. f. 17.08.2019.

In second phase, from 01.10.2019 onwards, the progress of the work needs to be linked with the GIS mapping system for all departments. Payment to the contractor will be released as per work completed & reflected on GIS mapping. According to that progressive running bills / final bill of project works shall be accompanied with GIS mapping certificate. This geospatial data will help for solving the problems and making process decisions as per visualized data in a spatial environment. Further, from 01.10.2019 onwards, if any running bills / final bills are not accompanied with GIS mapping certificate, the same will not be accepted for payment. In case of non-payment of bills to the contractor as per tender conditions, the respective engineer in-charge will be held responsible.

The guidelines given by this circular should be followed scrupulously.

CA (Finance) 04/9/19.

Director (I.T.)

Jt.M.C.(Vigilance)

Director(E.S.&P.) 27/09/19

A.M.C.(E.S.) 25/9/19

A.M.C.(Project) 25/9/2019

Municipal Commissioner

MUNICIPAL CORPORATION OF GREATER MUMBAI

CIRCULAR

No.CA (F)/Project/31 Dt. 26/10/2020.

Subject: - Revised Policy for Governing Extra-excess-saving

Ref:- 1. Circular No.CA/FRD/I/57 dt.13.03.2013.
2. Circular No. Dir/E.S.&P./324 dt.15.07.2015.

At present the extra/excess/saving proposals are dealt as per Decision Rules framed under circular No.CA/FRD/I/57 of 13.03.2013 &Dir/E.S.&P./324 dt.15.07.2015.

Hon'ble M.C. has directed to review the existing Decision Rules and amend it suitably. Accordingly, in view to exercising effective control over the extra/excess and speedy process of such proposal during execution of the work, the powers of approval of extra/excess /saving and Fair items are reviewed and delegated according to the attached modified statement-"A". Except this, other conditions of Circular No. DIR./E.S.&P./324 dt.15.07.2015 shall remain unchanged and will be applicable as it is.

The "Decision Rules" framed and circulated apropos circular No.CA/FRD/1/57 of 13.03.2013 and Dir/ES&P/324 of 15.07.2015 shall remain applicable for those extra/excess works which were executed before issuance of these amended rules/directives by obtaining prior administrative approval of competent authority, as the case may be.

The revised policy for governing Extra/Excess and Fair items will come into effect immediately from the issuance of this circular.

All Chief Engineers/ Head of Departments/Deans shall note the above directives and follow them scrupulously.

Sd/- 13.10.2020
C. A. (WSSD)

Sd/- 13.10.2020
C. A. (Finance)i.c.

Sd/- 13.10.2020
D.M.C. (Infra)

Sd/- 13.10.2020
D.M.C.(E.)

Sd/- 14.10.2020
D.M.C.(S.E.)

Sd/- 13.10.2020
Dir.(E.S.&P.)

Sd/- 16.10.2020
A.M.C. (Project)

Sd/- 23.10.2020
Municipal Commissioner

Statement –A

(i) Extra/Excess/Saving

Nature of work	Permissible limit of Extra/Excess/Saving and Approving authority		
	DMC(Infra)/ DMC(E)/ DMC(SE)/ Dir(ES&P)/ Jt.M.C.	**Concerned A.M.C.**	**Municipal Commissioner**
General Work/ Underground works/ Unforeseen works	(i) ***Cumulative*** amount of Extra/Excess/Saving in any ***individual item*** Upto Rs.25 Lakh And (ii) Total ***Cumulative*** amount of Extra/Excess/Saving ***on all items*** upto 5% of the total contract cost, but not exceeding Rs.1 crore	***(i) Cumulative*** amount of Extra/Excess/Saving in any ***individual item*** Upto Rs.1crore And (ii)Total ***Cumulative*** amount of Extra/Excess/Saving ***on all items*** upto 15 % of the total contract cost, but not exceeding Rs.10 crore	(i) ***Cumulative*** amount of Extra/Excess/Saving in any ***individual item*** above Rs.1Crore And / OR (ii)Total ***Cumulative*** amount of Extra/Excess/Saving ***on all items*** above 15% of the total contract cost. And / OR ***Cumulative*** amount of Extra/Excess/Saving ***on all items*** exceeding Rs.10 Crores.

Payment Terms:

Excess Items shall be paid as per the rates quoted by the tenderer at the time of tender

Extra Items shall be paid as per the rate prevailing in "Unified Schedule of Rate" of MCGM at the time of tender at rebate quoted by the contractor or at Par in case of premium quoted by the contractor at the time of tender

(ii) Fair Item

Nature of work	Permissible limit of Fair Item and Approving authority		
	DMC(Infra)/ DMC(E)/ DMC(SE)/ Dir(ES&P)/ Jt.M.C.	**Concerned A.M.C.**	**Municipal Commissioner**
For all nature of work	Total ***Cumulative*** amount of Fair ***on all items*** upto 2% of the total contract cost, but not exceeds Rs.20 Lakh	Total ***Cumulative*** amount of Fair ***on all items*** upto 5 % of the total contract cost, but not exceeds Rs.1 crore (Other than the proposals in the purview of DMC/Jt.MC)	Total ***Cumulative*** amount of Fair ***on all items*** above 5% of the total contract cost. And / OR ***Cumulative*** amount of Fair ***on all items*** exceeding Rs.1 Crore.

Payment Terms:

Fair Items shall be got approved by the concerned DMC/Dir(ES&P)/Jt.M.C. The engineer in-charge shall work out these fair items at fair and reasonable market rates on the basis of material, labour and operation of construction equipment required to execute the item and allowing 15% to cover profits and overhead charges(i.e. including taxes, duties, etc.) On the same lines of rate analysis prepared for the items that are in "Unified Schedule of Rate" of MCGM.

The rates of Fair Items shall be valid for one year only. Moreover, no escalation will be admissible on the fair items till the completion of such works, in which the fair items are executed.

Fair Items shall be paid **at PAR** in case of premium quoted by the contractor, in newly created FAIR ITEM or item not included in prevailing "Unified Schedule of Rate" of MCGM at the time of tender. OR at rebate quoted by the contractor if it is already added in prevailing "Unified Schedule of Rate" of MCGM at the time of tender.

Sd/- 13.10.2020	Sd/- 13.10.2020	Sd/- 13.10.2020	Sd/- 13.10.2020	Sd/-14.10.2020	Sd/-13.10.2020
C. A. (WSSD)	**C. A. (Finance)i.c.**	**D.M.C.(Infra)**	**D.M.C.(E.)**	**D.M.C.(S.E.)**	**Dir.(E.S.&P.)**

MUNICIPAL CORPORATION OF GREATER MUMBAI

Chief Engineer (Vigilance) Department

ChE/Vig/ 1938 /B dtd. 23/11/21

CIRCULAR

Subject:- The guidelines related to re-assessment of strength of concrete for MCGM project works in cases of -

i) Non satisfactory results of concrete cube 28 Days Compressive Strength.

ii) Non satisfactory results of Concrete Core Compressive Strength test.

The Hon'ble M.C. vide approval u/no. MCP/2447 dated 15-11-2021 has approved the guidelines related to reconfirmation / re-assessment of strength of concrete in case of non-satisfactory results for 28 days compressive strength of concrete cubes / cores.

The guidelines are as under -

(i) In order to achieve the confirmation about satisfactory strength of concrete as per the relevant I.S. code provisions, it is necessary that specific clause in the tender **'Directions to the contractor'** need to be incorporated regarding the methodology for testing of samples -

In case of non- satisfactory/ failed results of 28 days concrete compressive strength, if 28 days concrete cube compressive strength test samples at MTL/ private NABL accredited labs are not satisfactory / failed; in such circumstances, the re-assessment of strength of concrete shall invariably to be done only at Municipal Testing Laboratory (MTL) by joint witness by the officer not below the rank of Assistant Engineer of the project and the representative of the contractor for assurance & acceptance of the strength of concrete work.

(ii) The existing practise/procedure followed in the on-going contracts for various engineering works / projects of MCGM to allow re-confirmation/ re-assessment of concrete strength at Municipal

approved private NABL accredited labs shall be discontinued with immediate effect.

(iii) In case of failure of test results in the on-going works, the further testing for reassurance of the strength as per the relevant tender condition shall only be done at Municipal Testing Lab (MTL) in presence of staff of user department not below the rank of Assistant Engineer and in presence of representative of the contractor.

(iv) In case of failure of re-confirmation of test report as envisaged in para (iii) above, the action as per the provisions of 8(f) of SGCC shall be strictly initiated by the executing department by obtaining the prior approval of concerned HOD.

All H.O.D.'s/ Asst. Commissioner's of ward are hereby informed & directed to instruct all the concerned Engineering staff to take the note of the above guidelines and implement with immediate effect, in proposed tenders / quotations / on-going works.

The copy of the above circular is being mailed on the official email address of the respective H.O.D./ Asst. Commissioner.

All DY HEs

Please peruse, note and ensure compliance of che(vig)'s guidelines with immediate effect; by instructing all concerned EEs/AEs/sr. technical staff, under you.

23/11/2021.

Sudhir V. Gajargaonkar
Ch.E. (Vigilance)

HE

COPY

Copy to:
For information and necessary action

City Engineer	Ch.E.(Rds. & Tr.)	Ch.E.(S.W.D.)	Ch.E.(Bridges)
Ch.E.(B.M.)	Hydraulic Engineer	Ch.E.(S.P.)	Ch.E.(S.O.)
Ch.E.(S.W.M.) Projects	Ch.E.(S.W.M.)	Ch.E. (Coastal Road)	Ch.E.(GMLR)
Ch.E.(W.S.P.)	Ch.E.(M.S.D.P.)	Ch.E.(CTI&RC)	
A.C. A Ward	A.C. B Ward	A.C. C Ward	A.C. D Ward
A.C. E Ward	A.C. F/S Ward	A.C. F/N Ward	A.C. G/S Ward
A.C. G/N Ward	A.C. H/E Ward	A.C. H/W Ward	A.C. K/E Ward
A.C. K/W Ward	A.C. P/S Ward	A.C. P/N Ward	A.C. R/S Ward
A.C. R/N Ward	A.C. R/C Ward	A.C. L Ward	A.C. M/E Ward
A.C. M/W Ward	A.C. N Ward	A.C. S Ward	A.C. T Ward

MUNICIPAL CORPORATION OF GREATER MUMBAI

HYDRAULIC ENGIEER'S DEPARTMENT

No. Dy.H.E.(C) / 5730 / IR dtd. 25/3/2022

Subject: Providing & fixing of valves (Butterfly valves, Air Valves, Sluice Valves etc.) for the works in Construction Division on the basis of MCGM specification i.e. without insisting for procurement through approved manufacturer.

Ref.: i) क्र.ज.अ./ 2256 / एस.आर. 08.12.2021.
ii) Minutes of meeting of Valve Committee (VAC) held on 01.09.2021.

A detailed note was submitted for the perusal of H.E. and seeking approval to allow to use (P/F) of different types of valves in Construction Division on the basis of MCGM specification & not to insist the procurement through approved manufacturer, as was done by Dy.H.E.(Maint.).

Thereafter, in the Valve Committee Meeting held on 01.09.2021, it was decided that specific and proven make valves are very much necessary at source i.e. primary network. The secondary network as well as tertiary network is successfully operated & maintained with the valves of MCGM specification. It was further decided to overview the performance of the valves procured with MCGM specifications (without Make) in distributory mains by 31.03.2021 (procured by all sections of H.E.).

Now, the Hydraulic Engineer has accorded approval and allowed the procurement / fixing of valves in distributing mains on the basis of MCGM specification, without adhering to the list of approved manufacturer, as being done by Dy.H.E.(Maint.). However for any tapping at primary network / tunnel, the valves with proven make shall only be used / fixed.

All concerned are herewith directed to take a note of the above approval.

-sd-
Dy.H.E.(Const.)

E.E.W.W.(Const.) City
E.E.W.W.(Const.) E.S.
E.E.W.W.(Const.) W.S.
A.O.(Const.)

c.c. to : Dy.H.E.(Maint.)

-sd-
Dy.H.E.(Const.)

c.c. to : Hydraulic Engineer

Sir,

Copy submitted for information please.

Dy.H.E.(Const.)

बृहन्मुंबई महानगरपालिका

परिपत्रक

प्र.ले./वित्त/प्रकल्प/२८ दि. २८/०३/२०२३

विषय: एकसामायिक दरसूची २०२३ अंतर्भूत करुन महानगरपालिकेद्वारे हाती घेण्यात येणारी विविध कामे तसेच प्राप्त करण्यात येणा-या वस्तु व सेवा इत्यादीबाबतच्या ई-निविदा/निविदा/दरपत्रक यामध्ये वस्तु व सेवा कराच्या अनुषंगाने अंतर्भूत करावयाच्या अटीबाबत.

संदर्भ: १) प्र.ले./वित्त/प्रकल्प/२५ दि.१२.०७.२०२२

२) संचालक/अ.से.व प्र./२९१/एमसी दि.३१.०१.२०२३

बृहन्मुंबई महानगरपालिकेद्वारे हाती घेण्यात येणारी विविध कामे तसेच प्राप्त करण्यात येणा-या वस्तु व सेवा इत्यादीबाबतच्या ई-निविदा/निविदा/दरपत्रक यामध्ये वस्तु व सेवा कराच्या अनुषंगाने अंतर्भूत करावयाच्या अटीबाबत संदर्भित क्र. १ वरील परिपत्रकान्वये सूचना प्रसृत केल्या आहेत.

महानगरपालिका आयुक्त यांच्या क्र. एमजीसी/एफ/८७७१ दि. ३०.०१.२०२३ अन्वये एकसमान दरसूची २०२३ प्रसारीत करण्यात आली आहे. सदर एकसामायिक दरसूची २०२३ हि वस्तू व सेवाकर वगळून तयार करण्यात आली आहे. सदर अद्ययावत एकसामायिक दरसूची २०२३ नुसार अंदाजपत्रक तयार करुन मागविण्यात आलेल्या/ येणा-या ई-निविदा/निविदा/दरपत्रक यांमध्ये वस्तू व सेवाकराच्या अनुषंगाने महानगरपालिकेद्वारे हाती घेण्यात येणारी विविध कामे तसेच प्राप्त करण्यात येणा-या वस्तु

व सेवा इत्यादीबाबतच्या ई-निविदा/निविदा/दरपत्रक यामध्ये संदर्भित क्र.१ अन्वये दिलेल्या अटीमध्ये पुढीलप्रमाणे बदल करण्यात येत आहे.

विद्यमान अट	सुधारित अट
"GST and other state levies/cess which are not subsumed under GST will be applicable. The tenderer shall quote inclusive of all taxes applicable at the time of bid submission. It is clearly understood that BMC will not bear any additional liability towards payment of any Taxes & Duties. Wherever the services to be provided by the Tenderers, falls under Reverse Charge Mechanism, the Price quoted shall be exclusive of GST, but inclusive of Taxes/Duties/Cess other than GST, if any. Rates accepted by BMC shall hold good till completion of work and no additional individual claim shall be admissible on account of fluctuations in market rates; increase in taxes/any other levies / tolls etc. except that payment/recovery for overall market situation shall be made as per Price variation **and if there is any subsequent change (after submission of bid) in rate of GST applicable on the work/services to be executed as per tender, i.e. any increase will be reimbursed by BMC whereas any reduction in the rate of GST shall be passed on to BMC as per the provisions of the GST Act.**	The tenderer shall quote inclusive of all taxes other than GST (**Excluding GST**), Levies, Duties, Cess etc as applicable at the time of bid submission. GST as applicable shall be paid separately on submission of bills/invoice. Input Tax Credit of GST as available with the bidder will not be claim separately by BMC. However, while quoting the rates benefit of Input Tax Credit or Exemptions shall be passed on to the BMC by way of equivalent reduction in quoted price.

उपरोक्त सुधारीत अट अद्ययावत एकसामायिक दरसूची २०२३ नुसार अंदाजपत्रक तयार करुन मागविण्यात आलेल्या/ येणा-या ई-निविदा/निविदा/दरपत्रक या कामांकरिता लागू असेल.

अतएव, सध्या ज्या ई-निविदा/निविदा/दरपत्रक एकसामायिक दरसूची २०२३ अंतर्भुत करुन मागविलेल्या आहेत अशा निविदांमध्ये नियत दिनांकापूर्वी शुद्धीपत्रकाद्वारे उपरोक्त सुधारीत अट समाविष्ट करण्याबाबत तसेच यापुढे एकसामायिक दरसूची २०२३ अंतर्भुत करुन मागविण्यात येणाऱ्या ई-निविदा/निविदा/दरपत्रक यांमध्ये उपरोक्त सुधारीत अट समाविष्ट करण्याबाबत संबंधित खातेप्रमुख यांनी दक्षता घ्यावी.

सर्व खातेप्रमुख, रूग्णालयांचे अधिष्ठाता, सहायक आयुक्त, यांनी उपरोक्त सुचनांचे काटेकोरपणे अनुपालन करावे.

सही/- २८/०३/२०२३
(पांडुरंग गोसावी)
प्रमुख लेखापाल (पा.पु.म.नि.)

सही/- २८/०३/२०२३
(प्रदिप पडवळ)
प्रमुख लेखापाल (वित्त) प्र.

सही/- २८/०३/२०२३
(रामदास आव्हाड)
उप आयुक्त (वित्त)

सही/- २८/०३/२०२३
(पी. वेलरासू)
अतिरिक्त आयुक्त (प्रकल्प)

BRIHANMUMBAI MUNICIPAL CORPORATION
Chief Engineer (Vigilance) Deptt.
Circular
No.ch.E(V)/436/B dated 18/05/2023

Sub: - Annexing the Clause of GRC (Grievance Redressal committee)in the tenders.

Ref: - 1) AMC(P)'s approval U.no. AMC/P/677 dated27.04.2023

As per the directions of AMC(P) u.no. AMC/P/677 dated27.04.2023, all the concerned HODs, Ch.Eng. are requested to annex the Clause of GRC (Grievance Redressal committee) accompanying with this circular, in every tenders, so that vendor directly do not approach to higher authorities.

(Girish B.Nikam) 18/5/23
Chief Engineer (Vigilance) EIC

C.C. to:
City Engineer, Hydraulic Engineer, Ch. E.(Roads & Traffic), Ch.E.(S.W.D.), Ch.E.(C.S.), Ch. E. D.P., Ch.E.(W.S.P.), Ch.E.(S.P.), Ch.E.(S.O.), Ch. E. (B.M.), Ch.E.(M&E)., Ch.E.(M.S.D.P.)., Ch.E.(S.W.M.), Ch.E.(C.T.I.&R.C.)., C.A.(Finance), C.A.(Treasury) , C.A.(Stores) , Law Officer. Dy.Ch. E. (Roads)City /W.S./E.S., Dy.Ch. E.(Bridges), Dy.H.E. City/W.S./E.S., Dy.Ch. E. (S.W.D.)City/E.S./W.S., Dy.Ch.E.(Civil)Environmental, Dy.Ch.(SIC), Dy.Ch.E.(B.M.)City/W.S./E.S., Dy.H.E.(Ops), Dy.H.E.(PPC), Dy.H.E.(Const), Dy.C.E.(P.I.Cell), Dy.Ch.E(HIC) , Dy.C.E. (BC)City / E.S./ W.S., Dy.H.E.(Maint), Dy.Ch.E.(Traffic), Asst. Comm.(A.H.T.)Wards., Asst. Comm.(Market.), Asst. Comm.(Estate), E.E. (B.C.) City, E.E. (B.C.) W.S., E.E. (B.C.) E.S., E.E.(M & R),E.E. (Garden Cell)A.O.FAS, A.O.FSA, A.O.FRD-II (City), A.O. (Stores), A.O.(Transport), Dean KEM Hospital, Dean Nair Hospital Dean Sion Hospital, Dean Cooper Hospital.

CS Scanned with CamScanner

ANNEXURE

GRIEVANCE REDRESSAL MECHANISM

BMC has formed a Grievance Redressal Mechanism for redressal of bidder's grievances. Any Bidder or prospective Bidder aggrieved by any decision, action or omission of the procuring entity being contrary to the provisions of the tender or any rules or guidelines issued therein. in Packet 'A', 'B' & 'C' can make an application for review of decision of responsiveness in Packet 'A', 'B' & 'C within a period of 7 days or any such other period, as may be specified in the Bid document.

While making such an application to procuring entity for review, aggrieved bidders or prospective bidders shall clearly specify the ground or grounds in respect of which he feels aggrieved.

Provided that after declaration of a bidder as a successful in Packet 'A' (General Requirements), an application for review may be filed only by a bidder who has participated in procurement proceedings and after declaration of successful bidder in Packet 'B' (Technical Bid), an application for review may be filed only by successful bidders of Packet 'A'. Provided further that, an application for review of the financial bid can be submitted, by the bidder whose technical bid is found to be acceptable / responsive.

Upon receipt of such application for review, BMC may decide whether the bid process is required to be suspended pending disposal of such review. The BMC after examining the application and the documents available to him, give such reliefs, as may be considered appropriate and communicate its decision to the Applicant and if required to other bidders or prospective bidders, as the case may be.

BMC shall deal and dispose off such application as expeditiously as possible and in any case within 10 days from the date of receipt of such application or such other period as may be specified in pre-qualification document, bidder registration document or bid documents, as the case may be.

Where BMC fails to dispose off the application within the specified period or if the bidder or prospective bidder feels aggrieved by the decision of the procuring entity, such bidder or prospective bidder may file an application for redressal before the "Internal Procurement Redressal Committee" within 7 days of the expiry of the allowed time or of the date of receipt of the decision, as the case may be. Every such application for internal redressal before Redressal Committee shall be accompanied by fee of Rs.25,000/- and fee shall be paid in the form of D.D. in favour of M.C.G.M.

1st Appeal by the bidder against the decision of C.E./ HOD/ Dean can be made to concerned DMC/Director who should decide appeal in 7 days.

If not satisfied, 2nd Appeal by the bidder can be made to concerned A.M.C. for decision.

CS Scanned with CamScanner

Grievance Redressal Committee (GRC) is headed by concerned D.M.C./ Director of particular department for the first appeal/ grievances by the bidder against the decision for responsiveness / non- responsiveness in Packet 'A', Packet 'B' or Packet 'C' and if not satisfied, concerned A.M.C. will take decision as per second appeal made by the bidder.

This Grievance Redressal Committee (GRC) will be operated through DMC (CPD) office where appeals of aggrieved bidder will be received with fee of Rs. 25,000/- from aggrieved bidder. The necessary correspondence in respect of said applications to the aggrieved bidder & concerned department, issuing notices, arranging of Grievance Redressal Committee (GRC) with D.M.C. and further proceeding will be carried out through registrar appointed by MCGM.

No application shall be maintainable before the redressal Committee in regard of any decision of the BMC relating to following issues:

Determination of need of procurement

The decision of whether or not to enter into negotiations.

Cancellation of a procurement process for certain reasons.

On receipt of recommendation of the Committee, It will be communicate his decision thereon to the Applicant within 10 days or such further time not exceeding 20 days, as may be considered necessary from the date of receipt of the recommendation and in case of non-acceptance of any recommendation, the reason of such non-acceptance shall also be mentioned in such communication.

Additional Municipal Commissioner and/or Grievance Redressal Committee, if found, come to the conclusion that any such complaint or review is of vexatious, frivolous or malicious nature and submitted with the intention of delaying or defeating any procurement or causing loss to the procuring entity or any other bidder, then such complainant shall be punished with fine, which may extend to Five Lac rupees or two percent of the value of the procurement, whichever is higher.

Full Signature of the tenderer with

Official Seal and Address

Scanned with CamScanner

Municipal Corporation of Greater Mumbai

Subject- Modification in GIS condition to be incorporated in upcoming HE department's tender.

Ref- EE/WDIP/SR/51/DT 15.06.2023

In Continuation to the above reference this is to inform that, there are some modifications in Sr no 1a & 1b of GIS condition and same should be read as under.

1) Contractor has to capture digital photographs and Geo coordinates (i.e. Latitude and Longitude) of each work ***(during execution of the work)*** *In the following manner:*

a) Contractor shall use latest GPS equipment in DGPS mode (RTK/PPK) for capturing Latitude/Longitude coordinates of Water Network Assets, which are compatible to the MCGM's existing DGPS Setup to get desired data quality.

b) The GPS coordinates shall be captured strictly in the presence of the concerned MCGM Site in charge. The photographs of the process of capturing the Geo coordinates with the help of latest DGPS Machine shall be taken and submitted as part of records to the concerned EEWW(Const).

Rest GIS Condition from Sr.No 1c to 10 will be the same as mentioned in the above reference (pg C-1 to C-5)

Submitted please,

sd

EE(WDIP)

E.E./WDIP/ SR /53/DT.
22 JUN 2023

DyHE(Const.)

Copy To-
EEWW(Const.) ES
EEWW(Const.)WS.
EEWW(Const.)City

Forwarded for information please.

22/06/23.
EE(WDIP)

o/c C-(1)

Municipal Corporation of Greater Mumbai

Subject- GIS condition to be incorporated in upcoming HE department's tender.

Reference is please requested to the minutes of meeting under no. HE/398/SR/OT Dated 16.05.2023. As per the direction given by HE in MoM at point no. 3, this department has modified GIS condition and same is as below:

1) Contractor has to capture digital photographs and Geo coordinates (i.e. Latitude and Longitude) of each work ***(during execution of the work)*** *In the following manner:*

- ***a)*** *Contractor shall use latest DGPS Rover of Trimble for capturing Latitude/Longitude coordinates of Water Network Assets, which are compatible to the MCGM's existing DGPS Setup i.e. GPS Receiver Trimble NetR9*
- ***b)*** *The GPS coordinates shall be captured strictly in the presence of the concerned MCGM Site in charge. The photographs of the process of capturing the Geo coordinates with the help of Trimble Machine shall be taken and submitted as part of records to the concerned EEWW(Const).*
- ***c)*** *The contractor shall capture the coordinates of water network assets and post process the DGPS Rover data in back office and generate "shape file" format using the 10 point character for attribute table as attached which is mandatory for uploading on One MCGM. Reference coordinates for shape file shall be WGS 1984 UTM 43N.*
- ***d)*** *For water mains, contractor shall capture Geo coordinate in the following manner:*

  i)At start point, at every turning point and end point.

  ii)Every bend shall be captured at both the ends to confirm the direction of water main.

  iii)For straight alignment of water main, Geo coordinates shall be taken at every 50m interval.

  iv)The coordinates of all Cross-connection points, Sluice valves, Valve chamber, BFVs, Air valves, Hydrants, Reducer, End cap, Manhole chamber, shall also be captured.

c) *In congested area where network is not available or poor, submission on Google Earth can be accepted for WDIP work only and not for laying work.*

2) *The contractor shall enter the field attribute data in the asset format attached and submit along with shape file for GIS Mapping Certificate.*

3) a) *Wherever necessary the contractor shall carry out TSS survey of Road where laying of water main work is to be executed. For TSS, use nearest MCGM's GCP monuments (total 24 monuments are available across Greater Mumbai) for reference.*

b) *For TSS survey. The contractor shall use UTM 43N using local datum (THD values from the nearest pillar) as directed by MCGM . Three-point location data should be given with field attribute data as per Asset formats attached along with the shape file and submit to the department. All water related features i.e. Pipe lines, valve chamber, hydrant, air valve etc. shall be marked on TSS with reference to urban vicinity features such as land mark, bus top, electrical poles, sewer main holes etc.*

4) *Tenderer shall also submit a certified hard copy of the surveyed data on Google earth map. It is also mandatory to submit detailed schematic sketch signed by concerned construction staff for assets such as cross connection, water main, diversion, reducer and service connection.*

5) *The attribute data of the H.E.'s assets shall be filled up in the prescribed formats as attached by Concern Contractor's representative and the site in charge, which shall be endorsed by concerned Executive Engineer.*

6) *The completion drawings shall be prepared using HE's existing GIS data/ One MCGM portal available with Executive Engineer(Construction).*

7) *After completion of work, the geo spatial data in "shape file", along with attribute data in prescribed formats as attached, shall be submitted to*

EE(WDIP) for updating in H.E.'s GIS database within two month, failing which a penalty of Rs. 500 per day will be recovered from the contractor.

8) *It is required to capture the geo spatial data on exposed main while carrying out the work for better accuracy in order to update HE's GIS data.*

9) *Tenderer shall note that, 5% amount of the total work done will be withheld for GIS work. The 5% deposit withheld will be released only after GIS Mapping Certificate is received from MWDIP department. This 5 %retention shall be in addition to the amount retained as retention money and amount withheld as per vigilance circular. Running bill/final bill shall be accompanied with GIS Mapping Certificate as per circular CA(F)/EXP/F1/22 Dated 30.09.2019.*

10) *The contractor shall note that no separate payment will be made for capturing GPS coordinates, carrying out TSS survey wherever required, and submission of photographs, CD of Auto CAD & shape files etc.*

Enclosed:

1)Prescribed Asset formats(page no. 7 to 33)

2)Asset formats with **10 point character** for attribute table of Shape File (page no 35 to 61)

Submitted please,

Chaudhari
95/06/23
o/c EE(WDIP)

E.E./WDIP/ SR /.....51...../DT.
15 JUN 2023

DyHE(Const.)

Mumbai Air Pollution Mitigation Plan

(In compliance with Hon. MC Order dtd. 13.03.23)

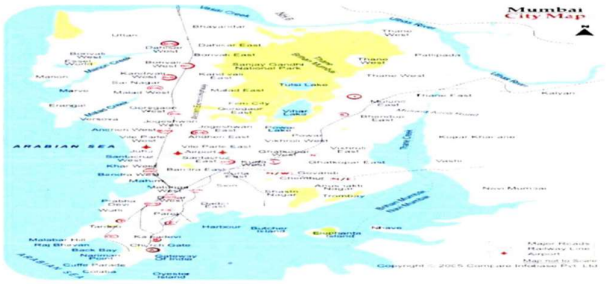

4-87

C/1

FROM THE DESK OF
MUNICIPAL COMMISSIONER

No. MCC/A/1386 Dt: 13/03/2023

The following Committee is hereby constituted to formulate the strategy for implementation of Mumbai's Air Pollution Mitigation Plan as announced in the BMC Budget for the year 2023-24:-

1.	Shri. Sanjeev Kumar	AMC (WS)	Chairman
2.	Shri Atul Patil	Director (E.S.& P.)	Member Secretary
3.	Shri Ulhas Mahale	DMC (Infra)	
4.	Smt. Chanda Jadhav	DMC (SWM)	
5.	Shri Manish Patel	ChE (Roads)	
6.	Shri. Sunil Rathod	ChE (DP)	
7.	Shri Kartik Langote	Representative of MPCB	
8.	Shri. S.B. Gite	Ex.Engg.(MCO)	

TORs. of Committee are as under:

1. Find out reasons for high degree of air pollution in Mumbai.
2. Suggest measures to reduce / minimise air pollution due to infrastructure projects, such as Metro, Roads, SWD, Coastal Roads, STPs, etc.
3. Measures to minimise air pollution due to building construction projects.
4. Monitoring mechanism for overseeing the implementation of air pollution mitigation measures including penalising the delinquents.

The committee shall give its objective report in seven working days.

13/3-23.

Municipal Commissioner

Copy To: ——— ——— ———

BRIHANMUMBAI MUNICIPAL CORPORATION

(Hydraulic Engineer's Department)

CIRCULAR

HE/01/Cir dated 11/05/2022

Subject: - Certification of all types of ward proposals under HE Department.

Reference: - HE/2184/IC dated 19/04/2022.

As per HE's approval vide No. HE/2184/IC dated 19/04/2022 for certification of all types of proposals under HE Department proposed by AEWW of respective wards and approved by EEWW(P&R)/Dy HE(P&C). The guidelines for certification of works through ward proposals are as under-

1. Certification of all type of ward proposals (150 mm dia. W.M. to 600 mm dia. WM) shall be obtained from EEWW (P&R) before handing over to AEWW of ward.
2. Certification of all type of ward proposals (Above 600 mm dia. WM) shall be obtained from Dy. HE (P&C) through EEWW (P&R) before handing over to AEWW of ward.
3. Certification of all type of ward proposals (below 150mm dia. W.M.) shall be obtained from AEWW of respective wards.
4. AEWW (Construction) shall submit all the details with drawings with GIS entry certification or migration on one MCGM plan & get certification of overall work by EEWW (P&R) office before commissioning of proposed work in co-ordination with AEWW of respective wards.

Dy HE(Const) section shall got certified the work executed through approved ward proposals from the office of EEWW (P&R) with required details for its consideration in the future planning purpose and keep updating the data time to time. It is mandatory to certify the work before handing over to the wards. The certified work shall be sent to ward for handing over & further process.

Dy HE (P&C) 11/5/22

Copy To : DyHE(Const)/DyHE(City)/DyHE(ES)/DyHE(WS)/EEWW(Const)City/ EEWW(Const)ES/ EEWW(Const)WS/EE(P) to HE/AO(HE)/AEWW( )Ward. / EEWW (WSIP)

All AE/ SE / JE

बृहन्मुंबई महानगर पालिका
कार्यकारी अभियंता जलकामे
(वांद्रेकाम) पश्चिम उपनगरे
दिनांक 27/5/22
10.11.IR

स.अभि. च. का. (वां. प. उप. परि 3,4,7
मुख्य लिपिक (द्वेषके) / आस्था.

Please

SEWW RG
Pl. note

कृ. कार्यकारी कार्यवाहीसाठी
30/5/22
कार्य. अभि. च. का. (वां. प.

Dy HE/C
AE/O

बृहन्मुंबई महानगरपालिका
विधी खाते

परिपत्रक क्र. २६२०६ दि. 31.08.2023

विषय - कंत्राट करार करण्यासाठी वसूल करावयाचे विधी आकार (Legal charges) व लेखनसाहीत्य आकार (Stationery charges)

संदर्भ - 1. परिपत्रक क्र. 10539 दि. 28.03.2023
2. एमजीसी/एफ/534 दि. 28.08.2023

.....

महानगरपालिकेच्या विविध खात्यांमार्फत मागविण्यात येणा-या निविदांसंदर्भात लेखी करार करताना पक्षकाराकडून एकत्रितरित्या आकारावयाच्या विधी आकार व लेखनसाहित्य आकाराची उपरोक्त संदर्भित क्र. 1 वरील परिपत्रकानुसार दि. 01.04.2023 पासून आकारणी करण्यात आलेली आहे.

तथापि महानगरपालिका आयुक्त यांच्या संदर्भ क्र. 2 च्या मंजुरीनुसार कंत्राट करार करण्यासाठी वसूल करावयाचे विधी आकार (Legal charges) व लेखनसाहीत्य आकार (Stationery charges) यामध्ये सुधारणा करण्यात आली असून खालील तक्त्यामध्ये दर्शविल्याप्रमाणे दि.01.09.2023 पासून सुधारीत विधी व लेखनसाहित्य (एकत्रितरित्या) आकार विहित करण्यात आलेले आहेत.

अनु. क्र	कंत्राट किंमत	एकत्रितरित्या आकारावयाचे सुधारीत विधी व लेखन साहीत्य आकार दि. 01.09.2023 पासून दि. 31.03.2024 पर्यंत
1	रु.. 50,000/-	निरंक
2	रु. 50,001 ते रु. 1,00,00,000	कंत्राट किंमतीच्या 0.10% दराने (अशी येणारी रक्कम पुढील शंभराच्या पटीत परावर्तीत करणे यासापेक्ष) अधिक 18% दराने वस्तू व सेवाकर (किमान रु. 1000/- अधिक वस्तू व सेवाकर आणि कमाल रु. 10000/- अधिक वस्तू व सेवाकर)
3	रु. 1,00,00,001 ते रु. 10,00,00,000/-	रु. 1,00,00,000/- पर्यंतच्या कंत्राट किंमतीसाठी रु.10,000/- अधिक रु. 1,00,00,000/- पेक्षा ज़ास्त रक्कमेवर 0.05% दराने (अशी येणारी रक्कम पुढील शंभराच्या पटीत परावर्तीत करणे यासापेक्ष) अधिक 18% दराने वस्तू व सेवाकर

4	रु. 10,00,00,001 ते पुढील कंत्राट किंमतीसाठी	रु. 10,00,00,000/- पर्यंतच्या कंत्राट किमतीसाठी रु.55,000/- अधिक रु. 10,00,00,000/- पेक्षा जास्त रक्कमेवर 0.01% दराने (अशी येणारी रक्कम पुढील शंभराच्या पटीत परावर्तीत करणे यासापेक्ष) अधिक 18% दराने वस्तू व सेवाकर

31/8/23

(शोभा अजितकुमार)
उप कायदा अधिकारी
(हस्तांतरण -2)
विधि खाते

31-08-2023

(संदिप मो. पाटील)
संयुक्त कायदा अधिकारी (प्र.)
(शहर दिवाणी न्यायालय)
विधि खाते

31/08/2023

(सुनिल सोनवणे)
कायदा अधिकारी
विधि खाते

परिपत्रक क्र. दि. 31.08.2023

प्रत ..... यांना माहीतीकरीता व पुढील आवश्यक त्या कार्यवाहीकरीता अग्रेषित.

31-08-2023

(संदिप मो. पाटील)
उप कायदा अधिकारी (आस्थापना)
विधि खाते

बृहन्मुंबई महानगरपालिका

परिपत्रक

२०२५-२६

क्र. सीए / एफआरजी / १५ दिनांक २०.०३.२०२६

विषय :- महानगरपालिकेच्या विविध खात्यांमार्फत मागविण्यात येणा-या अनस्टार दरपत्रिका / निविदा / दरपत्रिका / ई-दरपत्रिका / ई-निविदा दस्तऐवजांकरिता आकारण्यात येणाऱ्या निविदा शुल्कात (Tender Fee) वाढ करण्याबाबत.

संदर्भ :- १) क्र. एमजीसी/एफ/४४७१ दि. ०३.१०.२०२४

२) परिपत्रक क्र. सीए/एफआरजी/०९ दि. ०४.१०.२०२४

३) परिपत्रक क्र. सीए/एफआरजी/१७ दि. १७.०३.२०२५

बृहन्मुंबई महानगरपालिकेच्या विविध खात्यांमार्फत मागविण्यात येणाऱ्या अनस्टार दरपत्रिका / निविदा / दरपत्रिका / ई-दरपत्रिका / ई-निविदा दस्तऐवज यांच्या करिता पक्षकारांकडून आकारण्यात येणारे निविदा शुल्क उपरोक्त संदर्भ क्र. ०३ वरील परिपत्रकानुसार दिनांक ०१.०४.२०२५ पासून दिनांक ३१.०३.२०२६ पर्यंत सुधारीत दराने ऑनलाईन पद्धतीने आकारण्याबाबत निर्देश देण्यात आले होते.

दिनांक ०१.०४.२०२६ पासून मागविण्यात येणाऱ्या अनस्टार दरपत्रिका / निविदा / दरपत्रिका / ई-दरपत्रिका / ई-निविदा दस्तऐवजांच्या किंमतीच्या दरांमध्ये सन २०२५-२६ या वर्षामध्ये १०% वाढ करण्यात येत आहे त्यानुसार लागू करावयाचे निविदा शुल्काचे सुधारित दर खालीलप्रमाणे आहेत :-

अनु क्र.	स्वारस्याची अभिव्यक्ती प्रस्ताव/ मालाचा पुरवठा/ सल्लागार सेवासह स्थापत्य कामे आणि सेवा इत्यादी विषयक कार्यालयीन अंदाजे रक्कम	अनस्टार दरपत्रिका/निविदा/दरपत्रिका/ ई-दरपत्रिका/ ई-निविदा दस्तऐवजांचे विद्यमान निविदा शुल्क (दि. ०१.०४.२०२५ पासून दि. ३१.०३.२०२६ पर्यंत)	दि. ०१.०४.२०२६ पासून दि. ३१.०३.२०२७ पर्यंत मागविण्यात येणाऱ्या अनस्टार दरपत्रिका/निविदा/दरपत्रिका/ ई-दरपत्रिका/ ई-निविदा दस्तऐवजांचे सर्व देकारदारांकडून वसूल करावयाचे निविदा शुल्क
०१	रु. ०३ लाखापर्यंत	रु. ३६३/- + १८% वस्तू व सेवाकर	रु. ४००/- + १८% वस्तू व सेवाकर
०२	रु. ३,००,००१/- ते रु. ५,००,०००/-	रु. ७२६/- + १८% वस्तू व सेवाकर	रु. ८००/- + १८% वस्तू व सेवाकर

०३	रु. ५,००,००१/- ते रु. १०,००,०००/-	रु. १,४५२/- + १८% वस्तू व सेवाकर	रु. १,६००- + १८% वस्तू व सेवाकर
०४	रु. १०,००,००१/- ते रु. २५,००,०००/-	रु.३,६३०/- + १८% वस्तू व सेवाकर	रु.३,९९३/- + १८% वस्तू व सेवाकर
०५	रु. २५,००,००१/- ते रु. ५०,००,०००/-	रु. ७२६०/- + १८% वस्तू व सेवाकर	रु. ७,९८६/- + १८% वस्तू व सेवाकर
०६	रु. ५०,००,००१/- ते रु. १,००,००,०००/-	रु.१४,५२०/- + १८% वस्तू व सेवाकर	रु.१५,९७२/- + १८% वस्तू व सेवाकर
०७	रु. १,००,००,००१/- ते रु. २५,००,००,०००/-	रु.१८,१५०/- + १८% वस्तू व सेवाकर	रु १९,९६५/- + १८% वस्तू व सेवाकर
०८	रु. २५,००,००,००१/- पेक्षा जास्त	रु.३०,२५०/- + १८% वस्तू व सेवाकर	रु. ३३,२७५/- + १८% वस्तू व सेवाकर

अनस्टार दरपत्रिका / निविदा / दरपत्रिका / ई-दरपत्रिका / ई-निविदा दस्तऐवजांच्या किंमतीचे सुधारीत निविदा शुल्क दिनांक ०१.०४.२०२६ पासून दिनांक ३१.०३.२०२७ पर्यंत अंमलात येतील. संदर्भ क्र. २ च्या परिपत्रकातील अन्य निर्देशांमध्ये कोणतेही बदल करण्यात आलेले नाहीत.

तरी सर्व खाते प्रमुख/सहाय्यक आयुक्त / रुग्णालय प्रमुख / अधिष्ठाता यांनी त्यांच्या अखत्यारीतील संबंधित कर्मचारी वृंदाना उपरोक्त सुचनेची काटेकोरपणे अंमलबजावणी करण्याचे तसेच दिनांक ०१.०४.२०२६ पासून मागविण्यात येणाऱ्या अनस्टार दरपत्रिका / निविदा / दरपत्रिका / ई-दरपत्रिका / ई-निविदा दस्तऐवजांकरीता या परिपत्रकातील सुधारीत दरांनुसार निविदा शुल्क आकारण्याचे निर्देश द्यावेत.

सही/- ०५.०२.२०२६
श्रीम. वैशाली देसाई
प्रमुख लेखापाल (वित्त) प्र.

परिपत्रक
२०२५-२६
क्र.सीए / एफआरजी /१५ दिनांक २०.०३.२०२६

प्रत .....(जादा .....प्रतींसह) यांना माहितीकरिता व पुढील आवश्यक त्या कार्यवाहीकरिता अग्रेषित.

20.03.2026

प्रमुख लेखापाल (वित्त) यांजकरिता

महाराष्ट्र शासन

मुद्रांक जिल्हाधिकारी, अंमलबजावणी-2, मुंबई यांचे कार्यालय,

प्रधान मुद्रांक कार्यालय, नगर भवन, फोर्ट, मुंबई - 400 001.

दुरध्वनी क्र. 022-22664585
email: cosenf2@gmail.com

जा.क्र./मु.जि.अंमल-2/10ड/138 /2025 दिनांक: 04 FEB 2025

प्रति,

जल अभियंता,
महानगरपालिका इंजिनिअरींग हब इमारत, 1 ला मजला
डॉ. ई. मोझेस मार्ग, आचार्य अत्रे चौक, वरळी, मुंबई- 400018
Email- he@mcgm.gov.in

विषयः महाराष्ट्र मुद्रांक अधिनियमाचे कलम 10 ड अन्वये दस्तांवर मुद्रांक शुल्क वसुल करुन त्याबाबत मासिक अहवाल सादर करणेबाबत.

संदर्भ -1) महाराष्ट्र मुद्रांक अधिनियम मधील 10 ड तसेच शासन अधिसुचना दि.03/06/2016.
2) मा.नोंदणी महानिरीक्षक व मुद्रांक नियंत्रक, पुणे यांचेकडील परीपत्रक क्र. जा. क्र.12/म.मु.अधि.कलम10ड/355/2023, दिनांक 07/07/2023.
3) या कार्यालयाचे पत्र जा.क्र.मु. जि.अंमल-2/10-ड/676-683/2023 दि.18/07/2023
4) उपप्रमुख लेखापाल (महसूल-2), बृहन्मुंबई महापालिका यांचेकडील पत्र जा. क्र. सीए/एफआरएम/44 दि.12/05/2023
5) या कार्यालयाचे पत्र जा.क्र.मु. जि.अंमल-2/10-ड/900-901/2023 दि.14/08/2023
6) नोंदणी व मुद्रांक विभाग, अपर मुद्रांक नियंत्रक, मुंबई यांचे पत्र जा. क्र.मुख्य शाखा10ड/4536/2024, दिनांक 19/09/2024.
7) महाराष्ट्र शासन राजपत्र 14 ऑक्टोंबर-2024

उपरोक्त विषयी महाराष्ट्र मुद्रांक अधिनियमातील कलम 10- ड मधील तरतुदीनुसार आपल्या कार्यालयाकडून निष्पादीत करण्यात येणा-या संलेखावर/ दस्तावर देय मुद्रांक शुल्काच्या ई प्रदानाची पडताळणी करणे, चलन विरुपीत करणे इत्यादी कामांसाठी आपल्या कार्यालयातील अधिकारी यांना समुचीत अधिकारी (Proper Officer) म्हणून नामनिर्देशीत करणेबाबत तसेच या कामी सुसुत्रता आणण्यासाठी व शासनाच्या मुद्रांक शुल्कादवारे मिळणा-या महसुलाचे नुकसान होऊ नये यासाठी एक नोडल अधिका-याची (Nodal Officer) नियुक्ती होणेबाबत मा. नोंदणी महानिरीक्षक व मुद्रांक नियंत्रक, पुणे यांचेकडील संदर्भ क्र.2 चे परिपत्रकान्वये सुचीत केले आहे.

क्र.जअ/3256 /एसआर/ओसी
दि. 11 FEB 2025

A.O. Budget
for mk. 10/2/25

त्याअनुषंगाने आपले कार्यालयांमध्ये/ आपल्या अधिनस्त असलेल्या सर्व कार्यालयांमध्ये मुद्रांक शुल्क संदर्भातील माहिती संकलित करण्यासाठी व त्यामध्ये सुसुत्रता आणण्यासाठी **"प्रॉपर ऑफिसर"** व **"एक नोडल अधिकारी"** यांची नियुक्ती करून त्या अधिका-याचा तपशिल कळविणेबाबत तसेच, आपले कार्यालयाकडू/ आपले कार्यालयाच्या अधिनस्त कार्यालयांकडून निष्पादीत झालेल्या नमुद चार प्रकारच्या दस्तांची माहिती या कार्यालयास दरमहा पाठविणेबाबत मा. आयुक्त, बृहन्मुंबई महानगरपालिका यांना संदर्भ क्र.3 अन्वये तसेच, वारंवार कळविण्यात आले आहे. तसेच संदर्भ क्र.4 चे पत्रान्वये उक्त माहिती या कार्यालयास सादर करणेबाबत आदेशित केले आहे.

ओम

परंतु आपल्या कार्यालयाकडून संपूर्ण माहिती अद्यापी या कार्यालयास प्राप्त झालेली नाही. तरी, आपले मार्फत खालील नमुद माहिती एकत्रित संकलित करुन या कार्यालयास उपलब्ध होणे अपेक्षित आहे.

1) आपले अधिनस्त विभाग/ कार्यालयांमध्ये उक्त अधिनियमाचे कलम 10 (ड) मधील तरतुदींची अंमलबजावणी करणे करीता नियुक्त करण्यात आलेले **"प्रॉपर ऑफिसर"** व **"नोडल अधिकारी"** यांची माहिती या पत्रासोबत जोडलेल्या **विवरणपत्र क्र. 1** मध्ये द्यावी.
2) दरमहा आपले अधिनस्त विभाग/ कार्यालयांकडून निष्पादित झालेले दस्त म्हणजेच (1) कार्यकंत्राट, (2) विकसन करार, (3) टी.डी.आर. हस्तांतरण करार व (4) भाडेपटटा या चार प्रकारच्या दस्तांची माहिती या पत्रासोबत जोडलेल्या **विवरणपत्र क्र. 2** मध्ये Hard Copy स्वरुपात द्यावी. तसेच उपरोक्त विवरणपत्र Excel मध्ये Soft Copy स्वरुपात cosenf2.@gmail.com या ई-मेलवर पाठविण्यात यावी.
3) या पत्रासोबत जोडलेल्या प्रपत्र क्र.1 व प्रपत्र क्र.2 ची माहिती दरमहा 10 तारखेपुर्वी या कार्यालयास सादर करावी.
4) **महाराष्ट्र मुद्रांक अधिनियम 1958 मधील कलम 52 (ब) मध्ये नमुद केल्यानुसार मुद्रांक खरेदी केल्याच्या तारखेपासून सहा महिन्यांचा कालावधी पुर्ण होण्यापूर्वी वापरता येतील.**
5) महाराष्ट्र शासन राजपत्र दिनांक-14/10/2024 अन्वये महाराष्ट्र मुद्रांक अधिनियमातील अनुच्छेद 63 मध्ये कार्यकंत्राट च्या दस्तांवर मुद्रांक शुल्कांत खालीलप्रमाणे सुधारणा करण्यात आलेली आहे.

Article	Description of Instrument	Stamp Duty before 14/10/2024	Stamp Duty from 14/10/2024
63	Work Contract		
	a) Up to Rs. 5 lakhs	Rs. 500/-	Rs,500/-
	a) Above Rs. 5 lakhs up to Rs.10 lakhs. Rs. 500/- (Five hundred rupees.)	Rs. 500/-	Rs.500 + 0.3 % on the amount above Rs. 5 lakhs Max Rs. 25 Lakhs
	b) Above Rs. 10 lakhs	Rs. 500 + 0.1% Max Rs. 25 lakhs	Rs.500 + 0.3% on the amount above Rs. 5 lakhs Max Rs. 25 Lakhs

तरी आपल्या कार्यालयातील दिनांक- 14/10/2024 रोजी निष्पादित करण्यात आलेले कार्यकंत्राटचे दस्तांवर उपरोक्त प्रमाणे सुधारित मुद्रांक शुल्कांची वसुली करुन विवरणपत्र क्र.1 व विवरणपत्र क्र.2 सादर करण्यात यावे.

तरी उक्त नमुद माहिती अद्ययावत स्वरूपात या कार्यालयास तात्काळ सादर करावी. सदरची बाब ही शासन महसुलाशी निगडीत असल्याने आपण गांभिर्याने नोंद घ्यावी.

(अजित नैराळे)

मुद्रांक जिल्हाधिकारी, अंमलबजावणी 2

सोबत:

1) संदर्भ क्र.6 व 7 ची पत.

पत- मा. आयुक्त, बृहन्मुंबई महानगरपालिका मुख्यालय, मुंबई छत्रपती शिवाजी महाराज टर्मिनस, मुंबई- 400001 यांना माहितीस्तव सादर.

बृहन्मुंबई महानगरपालिका

परिपत्रक

२०१९-२०

क्रमांक : सीए/एफवीके/२४१, दिनांक २७.११.२०१९

विषय : बँकेने दिलेले हमीपत्र (बँकर्स गॅरंटी) स्विकारण्याबाबत.

संदर्भ : सीए/एफवीके/३९, दिनांक – ०७/१२/२०१२
सीए/एफवीके/२५, दिनांक – १०/१०/२०१२

कंत्राटदार / पुरवठादार यांच्याकडून सादर करण्यात येणारी बँक हमीपत्रे (बँकर्स गॅरंटी) स्विकारण्यासंदर्भात उपरोक्त संदर्भाधीन परिपत्रकान्वये मार्गदर्शनपर सूचना परिक्रमित करण्यात आल्या आहेत. सदर परिपत्रकातील परिच्छेद क्रमांक २ मध्ये पुढील प्रमाणे सुधारणा करण्यात येत आहेत.

सदर परिपत्रकात नमूद केलेली भारतीय रिझर्व बँकेची "rbidocs.rbi.org.in/rdocs/publications/pdfs/84656.pdf" ही लिंक "www.rbi.org.in" अशी वाचण्यात यावी.

तरी, सर्व खातेप्रमुख, सहाय्यक महापालिका आयुक्त आणि संबंधित यांनी वरील सुधारणेची नोंद घेऊन संबंधित कंत्राटदार/पुरवठादार यांना अवगत करावे.

सही/- १४.११.२०१९
प्रमुख लेखापाल (पा.पु.म.नि.)

सही/- १४.११.२०१९
प्रमुख लेखापाल (वित्त) प्र.

<u>परिपत्रक</u>

२०१९-२०

क्रमांक : सीए/एफवीके/२४१, दिनांक २७.११.२०१९

---------- यांना प्रत (---------) अधिक प्रतींसह माहितीकरिता व योग्य त्या कार्यवाहीसाठी पाठवित आहे.

सदर परिपत्रक महानगरपालिकेच्या ftp://hr.mcgm.gov.in/Circular/CA/Finance/2019/ या संकेतस्थळावर प्रसिद्ध करण्यात आलेले आहे.

बृहन्मुंबई महानगरपालिका
मुख्य लेखापाल पापुमनि खाते
लेखा अधिकारी ५१ एन
30 DEC 2019
2986-BR
NS3429-CA-BMPP-39772-2019-20-2200Copies
प.ले./पापुमनि/५१एन...../
G:\SANDIP LETTERS-2.doc77

31/12/19

पि.प्र. कयरे. २७/११/१९
प्रमुख लेखापाल (वित्त) यांजकरिता

01-01-2020

CS Scanned with CamScanner

THE SECOND SCHEDULE TO THE RESERVE BANK OF INDIA ACT, 1934

[Sections 2(e) and 42]

SCHEDULED BANKS

STATE CO-OPERATIVE BANKS
Andhra Pradesh State Co-operative Bank Ltd. Hyderabad
Bihar State Co-operative Bank Ltd., Bihar
Goa State Co-operative Bank Ltd. , Panaji
Gujarat State Co-operative Bank Ltd., Ahmedabad
Haryana State Co-operative Apex Bank Ltd., Chandigarh
Karnataka State Co-operative Apex Bank Ltd., Bangalore
Kerala State Co-operative Bank Ltd., Thiruvananthapuram
Madhya Pradesh Rajya Sahakari Bank Maryadit, Bhopal
Maharashtra State Co-operative Bank Ltd., Mumbai
Orissa State Co-operative Bank Ltd., Bhubaneswar
Pondicherry State Co-operative Bank Ltd. Pondicherry
Punjab State Co-operative Bank Ltd., Chandigarh
Rajasthan State Co-operative Bank Ltd., Jaipur
Tamil Nadu State Apex Co-operative Bank Ltd., Chennai
Uttar Pradesh Co-operative Bank Ltd., Lucknow
West Bengal State Co-operative Bank Ltd., Kolkata

Urban Co-operative Banks
A P Mahesh Co-operative Urban Bank Ltd., Hyderabad
Abhyudaya Co-operative Bank Ltd., Mumbai
Ahmedabad Mercantile Co-operative Bank Ltd., Ahmedabad
Akola Janata Commercial Co-operative Bank Ltd., Akola
Amanath Co-operative Bank Ltd., Bangalore
Bassein Catholic Co-operative Bank Limited, Vasai
Bharat Co-operative Bank (Mumbai) Ltd., Mumbai
Bharati Sahakari Bank Ltd., Pune
Bombay Mercantile Co-operative Bank Limited, Mumbai
Charminar Co-operative Urban Bank Ltd., Hyderabad
Citizen Credit Co-operative Bank Ltd., Mumbai
Dombivli Nagari Sahakari Bank Ltd., Dombivli
Greater Bombay Co-operative Bank Limited, Mumbai
Indian Mercantile Co-operative Bank Ltd., Lucknow
Jalgaon Janata Sahakari Bank Ltd., Jalgaon
Janakalyan Sahakari Bank Ltd., Mumbai
Janalaxmi Cooperative Bank Ltd., Nashik
Janata Sahakari Bank Ltd., Pune
Kallappanna Awade Ichalkaranji Janata Sahakari Bank Ltd., Ichalkaranji
Kalupur Commercial Co-operative Bank Ltd., Ahmedabad.
Kalyan Janata Sahakari Bank Ltd., Kalyan
Kapol Cooperative Bank Ltd., Mumbai
Karad Urban Co-operative Bank Ltd., Karad
Madhavapura Mercantile Co-operative Bank Ltd., Ahmedabad
Mahanagar Co-operative Bank Ltd., Mumbai
Mapusa Urban Co-operative Bank of Goa Ltd., Mapusa
Mehsana Urban Co-operative Bank Ltd., Mehsana
N K G S B Co-operative Bank Ltd., Mumbai
Nagar Urban Co-operative Bank Ltd., Ahmednagar
Nagpur Nagrik Sahakari Bank Ltd., Nagpur
New India Co-operative Bank Ltd., Mumbai
Nutan Nagrik Sahakari Bank Ltd., Ahmedabad
Parsik Janata Sahakari Bank Ltd., Thane
Pravara Sahakari Bank Ltd., Loni
Punjab & Maharashtra Co-operative Bank Ltd., Mumbai
Rajkot Nagrik Sahakari Bank Ltd., Rajkot
Rupee Co-operative Bank Ltd., Pune
Sangli Urban Co-operative Bank Ltd., Sangli
Saraswat Co-operative Bank Ltd., Mumbai
Sardar Bhiladwala Pardi People's Co-operative Bank Ltd., Killa Pardi
Shikshak Sahakari Bank Ltd., Nagpur
Solapur Janata Sahakari Bank Ltd., Solapur
Surat People's Co-operative Bank Ltd., Surat
Thane Bharat Sahakari Bank Ltd., Thane
Thane Janata Sahakari Bank Ltd., Thane
The Akola Urban Co-operative Bank Ltd., Akola
The Cosmos Co-operative Bank Ltd., Pune
The Goa Urban Co-operative Bank Ltd., Panaji
The Khamgaon Urban Co-operative Bank Ltd., Khamgaon
The Nasik Merchant's Co-operative Bank Ltd., Nasik
The Shamrao Vithal Co-operative Bank Ltd., Mumbai
The Zoroastrian Co-operative Bank Ltd., Mumbai
Vasavi Co-operative Urban Bank Limited, Hyderabad

SBI AND ASSOCIATES
State Bank of India
State Bank of Bikaner & Jaipur
State Bank of Hyderabad
State Bank of Indore
State Bank of Mysore
State Bank of Patiala
State Bank of Saurashtra
State Bank of Travancore
NATIONALISED BANKS
Allahabad Bank
Andhra Bank
Bank of Baroda
Bank of India
Bank of Maharashtra
Canara Bank
Central Bank of India
Corporation Bank
Dena Bank
Indian Bank
Indian Overseas Bank
Oriental Bank of Commerce
Punjab National Bank
Punjab and Sind Bank
Syndicate Bank
UCO Bank
Union Bank of India
United Bank of India
Vijaya Bank
OTHER PUBLIC SECTOR BANKS
Industrial Development Bank of India Ltd.
PRIVATE SECTOR BANKS
Bank of Rajasthan Ltd.
Catholic Syrian Bank Ltd.
City Union Bank Ltd.
Development Credit Bank Ltd.
Dhanalakshmi Bank Ltd.
Federal Bank Ltd.
HDFC Bank Ltd.
ICICI Bank Ltd.
IndusInd Bank Ltd.
ING Vysya Bank Ltd.
Jammu and Kashmir Bank Ltd.
Karnataka Bank Ltd.
Karur Vysya Bank Ltd.
Kotak Mahindra Bank Ltd.
Lakshmi Vilas Bank Ltd.
Nainital Bank Ltd.
Ratnakar Bank Ltd.
SBI Commercial International Bank Ltd.
South Indian Bank Ltd.
Tamilnad Mercantile Bank Ltd.
Axis Bank Ltd.
Yes Bank Ltd.

FOREIGN BANKS
ABN Amro Bank N.V.
Abu Dhabi Commercial Bank Ltd.
American Express Banking Corporation
Antwerp Diamond Bank N.V.
Arab Bangladesh Bank
Bank International Indonesia
Bank of America
Bank of Bahrain and Kuwait B.S.C.
Bank of Ceylon
Bank of Nova Scotia
Bank of Tokyo – Mitsubishi Ltd.
Barclays Bank Plc.
BNP Paribas
China Trust Commercial Bank
Shinhan Bank
Citi Bank N.A.
Calyon Bank
Deutsche Bank
DBS Bank Ltd.
The Hongkong and Shanghai Banking Corporation Ltd.
J.P. Morgan Chase Bank N.A.
Krung Thai Bank Public Company Ltd.
Mashreq Bank p.s.c.
Mizuho Corporate Bank Ltd.
Oman International Bank S.A.O.G.
Societe Generale
Sonali Bank
Standard Chartered Bank
State Bank of Mauritius Ltd.

GRAMIN BANKS
Andhra Pradesh Grameen Vikas Bank, Warangal (Andhra Pradesh)
Andhra Pragathi Grameena Bank, Kadapa (Andhra Pradesh)
Aryavart Gramin Bank, Lucknow (Uttar Pradesh)
Arunachal Pradesh Rural Bank, Naharlagun (Arunachal Pradesh)
Assam Gramin Vikas Bank, Guwahati (Assam)
Baitarani Gramya Bank, Baripada (Orissa)
Ballia Kshetriya Gramin Bank, Ballia (Uttar Pradesh)
Bangiya Gramin Vikash Bank, Berhampore (West Bengal)
Baroda Gujarat Gramin Bank, Bharuch (Gujarat)
Baroda Rajasthan Gramin Bank, Ajmer (Rajasthan)
Baroda Uttar Pradesh Gramin Bank, Rae Bareli (Uttar Pradesh)
Bihar Kshetriya Gramin Bank, Monghyr (Bihar)
Cauvery Kalpatharu Grameena Bank, Mysore (Karnataka)
Chaitanya Godavari Grameena Bank (Andhra Pradesh)
Chhattisgarh Gramin Bank, Raipur (Chhattisgarh)
Chikmagalur-Kodaga Grameena Bank, Chikmagalur (Karnataka)
Deccan Grameena Bank, Dilsukhnagar (Hyderabad)
Dena Gujarat Gramin Bank, Gandhinagar (Gujarat)
Durg-Rajnandgaon Gramin Bank, Rajnandgaon (Chhattisgarh)
Ellaquai Dehati Bank, Srinagar (Jammu and Kashmir)
Etawah Kshetriya Gramin Bank, Etawah (Uttar Pradesh)
Faridkot Bhatinda Kshetriya Gramin Bank, Bhatinda (Punjab)
Gurgaon Gramin Bank, Gurgaon (Haryana)
Hadoti Kshetriya Gramin Bank, Kota (Rajasthan)
Haryana Gramin Bank, Rohtak (Haryana)
Himachal Gramin Bank, Mandi (Himachal Pradesh)
Jaipur Thar Gramin Bank, Jaipur (Rajasthan)
Jammu Rural Bank, Jammu
Jhabua-Dhar Kshetriya Gramin Bank, Jhabua (Madhya Pradesh)
Jharkhand Gramin Bank, Ranchi (Jharkhand)
Kalinga Gramya Bank, Cuttack (Orissa)
Kamraz Rural Bank, Sopore (Jammu and Kashmir)
Karnatka Vikas Gramin Bank, Dharwad (Karnataka)
Kashi Gomti Samyut Gramin Bank, Varanasi (Uttar Pradesh)
Khasi J Bank, Shillong (Meghalaya)
Krishna Grameena Bank, Gulbarga (Karnataka)
Kshetriya Kisan Gramin Bank, Mainpuri (Uttar Pradesh)
Langpi Dehangi Rural Bank, Dhiphu (Assam)
Lucknow Kshetriya Gramin Bank, Sitapur (Uttar Pradesh)
Madhya Bharath Gramin Bank, Sagar (Madhya Pradesh)
Madhya Bihar Gramin Bank, Patna (Bihar)
Mahakaushal Kshetriya Gramin Bank, Jabalpur (Madhya Pradesh)
Maharashtra Godavari Gramin Bank (Maharashtra)
Malwa Gramin Bank, Sangrur (Punjab)
Marwar Ganganagar Bikaner Gramin Bank, Pali (Rajasthan)
Manipur Rural Bank, Imphal (Manipur)
Marathwada Gramin Bank, Nanded (Maharashtra)
Mewar Aanchalik Gramin Bank, Udaipur (Rajasthan)
Mizoram Rural Bank, Aizawl (Mizoram)
Nagaland Rural Bank, Kohima (Nagaland)
Nainital Almora Kshetriya Gramin Bank, Nainital (Uttaranchal)
Narmada Malwa Gramin Bank, Indore (Madhya Pradesh)
Neelachal Gramya Bank (Orissa)
North Malabar Gramin Bank, Kannur (Kerala)
Pallavan Grama Bank, Salem (Tamil Nadu)

Pandyan Grama Bank, Virudhunagar (Tamil Nadu)
Paschim Banga Gramin Bank, Howrah (West Bengal)
Parvatiya Gramin Bank, Chamba (Himachal Pradesh)
Pragathi Gramin Bank, Bellary (Karnataka)
Prathama Bank, Moradabad (Uttar Pradesh)
Puduvai Bharthiar Grama Bank (Pondicherry)
Punjab Gramin Bank, Kapurthala (Punjab)
Purvanchal Gramin Bank, Gorakhpur (Uttar Pradesh)
Rajasthan Gramin Bank, Alwar (Rajasthan)
Ratnagiri Sindhudurg Gramin Bank, Ratnagiri (Maharashtra)
Rewa-Sidhi Gramin Bank, Rewa (Madhya Pradesh)
Rushikulya Gramya Bank, Berhampur (Orissa)
Samastipur Kshetriya Gramin Bank, Samastipur (Bihar)
Saptagiri Grameena Bank, Chitoor (Andhra Pradesh)
Sarva UP Gramin Bank (Uttar Pradesh)
Satpura Narmada Kshetriya Gramin Bank, Chhindwara (Madhya Pradesh)
Saurashtra Gramin Bank, Rajkot (Gujarat)
Sharda Gramin Bank, Satna (M.P.)
Shreyas Gramin Bank, Aligarh (Uttar Pradesh)
Solapur Gramin Bank, Solapur (Maharashtra)
South Malabar Gramin Bank (Kerala)
Surguja Kshetriya Gramin Bank, Ambikapur (Chhattisgarh)
Tripura Gramin Bank, Agartala (Tripura)
Triveni Kshetriya Gramin Bank, Orai (Uttar Pradesh)
Utkal Gramya Bank, Bolangir (Orissa)
Uttaranchal Gramin Bank, Dehradun (Uttaranchal)
Uttar Banga Kshetriya Gramin Bank, Cooch-Behar (West Bengal)
Uttar Bihar Kshetriya Gramin Bank, Muzaffarpur (Bihar)
Vananchal Gramin Bank, Dhumka (Jharkhand)
Vidharbha Kshetriya Gramin Bank, Akola (Maharashtra)
Vidisha-Bhopal Kshetriya Gramin Bank, Vidisha (Madhya Pradesh)
Visveshwaraya Grameen Bank, Mandya (Karnataka)
Wainganga Kshetriya Gramin Bank, Chandrapur (Maharashtra)

MUNICIPAL CORPORATION OF GREATER MUMBAI

D.M.C./S.E./ 1642 /dt. 6/7/2017

CIRCULAR

In recent review meetings several issues pertaining to newly laid water mains are cropped up which includes non de-commissioning of old water mains, commissioning of new water mains, leakage through new water mains, contamination and non-transfer of service connections on old water mains. To avert these issues following directives are issued:

1. While preparing the Draft Tender the provision for all work shall be made, so that when water main laying work completed same can be tested, chlorinated and commissioned immediately.
2. In case of replacement of old water mains by new one the provision of discarding old water mains shall be kept in the tender and same to be carried out immediately after commissioning of the water main fully alongwith all allied works.
3. The water mains laid through the Contract, if not commissioned, 10% amount of Contract shall be withheld and released only after commissioning of the water main.
4. AE (Const) to ensure proper connectivity of water mains in consultation with AEWW of ward and if required, from EEWW (P&R).
5. The water main shall be flushed full bore in the presence of AE (Const) / AEWW of ward concern and duly signed record of the same shall be maintained.
6. During testing of water main shall be witnessed by AE (Const) / AE (M) / AE WW of ward concern and all the three should sign the test certificate.
7. The new water main shall be Chlorinated in the presence of AE (Const) / AEWW of ward concern and duly signed record of the same shall be maintained.

Any deviation in above directives or non-compliance will be viewed very seriously, which may be noted.

Due to site constraints or any other reasons beyond normal circumstances DMC (SE)'s specific approval shall be obtained in each such specific case.

B.Rambole
6/7/2017

DMC (SE)

Copy to :

DyHE(City)/ DyHE (ES)/ DyHE (WS) / DyHE(Const)/ DyHE(P&C) / DyHE(OP) / DyHE(Maint) /EEWW(C)City /EE WW (P&R) / EEWW(C)ES / EEWW(C)WS/ EEWW(City-N)/ EEWW(City-S) / EEWW(WS-N) / EEWW(WS-S) / EEWW(ES-N) / EEWW(ES-S) /EE ... EE (M) MW / EE (HW) / AEWW (M) City / AEWW (M) ES / AEWW (M) WS/N

BRINHANMUMBAI MUNICIPAL CORPORATION

No. : MGC/F/6446 dtd. 06/10/2025

Sub : Proposed redevelopment of Akurli Maternity Home on plot bearing CTS No. 65 & 66 (pt) located at Aakurli Road, Kandivali East in R/South Ward.

या संपूर्ण प्रकल्पाच्या निवेदा प्रक्रियेमध्ये B.M. विभागाने मनपाच्या परिपत्रक क्रमांक प्र.ले. (वित्त)/४२ दिनांक ९.१.२०२१ बाबत तत्कालीन अतिरिक्त आयुक्त (पश्चिम उपनगरे) यांची मंजुरी घेऊन बदल केला आहे. त्यामुळे ही गुंतागुंत निर्माण झाली आहे. सदर परिपत्रकामध्ये अतिरिक्त सुरक्षा अनामत रक्कम भरण्याबाबतची सुधारित अट नमूद करण्यात आली आहे. त्यानुसार मसुदा निविदेमध्ये (SBD) त्याचा समावेश करण्याचे स्पष्ट आदेश आहेत.

सदर परिपत्रक स्वयंस्पष्ट असून त्यानुसार निविदाधारकाने दिनांक २३.७.२०२५ रोजी डिमांड ड्राफ्ट सादर केला आहे. सदर प्रकरणात L-2 चा विचार केला गेला पण त्याने कामास नकार दिला असल्यामुळे सदर आधीच विलंब झालेल्या कामास अजून विलंब होईल.

म्हणून सदर पत्र परिपत्रकाप्रमाणे या प्रकरणी पुढील कार्यवाही करणे न्यायोचित होईल. त्यामुळे फेरनिविदा आणि त्यातील संभाव्य आर्थिक नुकसान टाळण्यास मदत होईल. तसेच वेळेचीही बचत होईल त्यामुळे फेरनिविदा काढण्याची गरज नाही.

वरील बाबी लक्षात घेता

१) याप्रकरणी L-1 ने परिपत्रकातील सर्व अटी आता पूर्ण केल्या असल्यामुळे फेरनिविदा अथवा त्यांना अपात्र न करता त्यांच्या प्रस्तावाच्या मंजुरीसाठी पुढील कार्यवाही तातडीने करावी.

२) या नंतर सर्व निविदांमध्ये परिपत्रक क्रमांक ४२ दिनांक ९.१.२०२१ नुसारच अट असेल याची खात्री सर्व विभाग व वित्त विभाग घेईल. त्यामध्ये बदल करण्यात येऊ नये.

महापालिका आयुक्त

3/10

अति. आयुक्त (पश्चिम उपनगरे)

MGC/E/6446
6/10/25

प्रमुख लेखापाल (वित्त)
मा.लेखा
आदेशान्वये
कृपया अवलोकनार्थ
सादरेनय सादर
6/10/25

बृहन्मुंबई महानगरपालिका
प्रमुख लेखापाल के कार्यालय
266
07 OCT 2025
क्रमांक PRC/1303

Dy. CA (Exp)/AO(P)

दुबे 6/10/25
CA (Finance) i/c

लेखा अधिकारी (PRC/PRW/PRE)
3/10/25
उप प्रमुख लेखापाल (व्यय)

A.O. (PRC)
Pl- circulate to all Dy.C.A.'s & Acct.officers and also to all A.C.'s/D.M.C.'s and HOD's.
Also take comisma in modified S.B.D statement.
3/10/25
Dy- C.A.C (Exp.)

C-1

बृहन्मुंबई महानगरपालिका

परिपत्रक

२०२०-२१

क.प्रले(वित्त)/४५२ दिनांक .०९.०२.२०२१

विषय:- बृहन्मुंबई महानगरपालिकेत कंत्राटदारामार्फत पार पाडावयाच्या कामाच्या ममुद्या निविदेमध्ये अतिरिक्त सुरक्षा अनामत रक्कमेबाबतची सुधारित अट समाविष्ट करण्याबाबत.

संदर्भ:- एमडीडी/७८७८ दिनांक २७.०९.२०१६.

बृहन्मुंबई महानगरपालिकेत कंत्राटदारामार्फत पार पाडण्यात येणाऱ्या कामाकरिताच्या ममुद्या-निविदेत समाविष्ट करावयाच्या अतिरिक्त सुरक्षा अनामत रक्कमेबाबतच्या अटींबाबतचे निर्देश संदर्भित परिपत्रकान्वये निर्गमित करण्यात आले आहेत. त्यामध्ये खालीलप्रमाणे सुधारणा करण्यात येत आहे.

विद्यमान पध्दत:-

ई-निविदा सूचनेस प्रतिसाद करुन ज्या ज्या कंत्राटदारांनी वजा -१२% पेक्षा कमी दराने टक्केवारी उदधृत केली आहे, अशया सर्व कंत्राटदारांना वजा १२% पेक्षा जास्त नमूद केलेल्या प्रत्येक टक्क्याला १% याप्रमाणे कोणतीही मर्यादा न ठेवता ऑनलाईन निविदा सादर करताना अतिरिक्त सुरक्षा अनामत रक्कम ऑनलाईन स्विकारली जाते.

सुधारित पध्दत:-

१. कंत्राटदाराने वजा -१२% पेक्षा कमी दराने टक्केवारी उदधृत केली असल्यास वजा १२% पेक्षा जास्त असलेल्या प्रत्येक टक्क्याला १% याप्रमाणे ऑनलाईन निविदा सादर करताना अतिरिक्त सुरक्षा अनामत रक्कमेचा ऑनलाईन भरणा करणे आवश्यक नसेल.

२. कंत्राट रक्कमेनुसार सक्षम प्राधिकाऱ्यांची मंजुरी प्राप्त झाल्यानंतर प्रथम लघुत्तम असलेल्या निविदाकाराने कार्यस्विकृती पत्रात नमूद केल्यानुसार कार्यालयीन कामकाजाच्या १५ दिवसात विद्यमान पध्दतीनुसार अतिरिक्त सुरक्षा अनामत रक्कम डिमांड ड्राफ्ट स्वरुपात महानगरपालिकेच्या नागरी सुविधा केंद्रात जमा करणे व त्या पावतीची प्रत खातेप्रमुखाकडे सादर करणे आवश्यक असेल.

३. जर प्रथम लघुत्तम निविदाकाराने कार्यस्विकृती पत्रात नमूद केल्यानुसार कार्यालयीन कामकाजाच्या १५ दिवसामध्ये अतिरिक्त सुरक्षा अनामत रक्कम जमा केली नाही तर सदर कपनीने भरणा केलेली संपूर्ण इसारा अनामत रक्कम (EMD) जप्त केली जाईल तसेच कपनीला दोन वर्षासाठी डीबार (Debar) करण्यात येईल, त्याचप्रमाणे त्या कपनीचे संचालक/

LOA

Scanned with CamScanner

Scanned with CamScanner

पार्टनर इतर कंपनीमध्ये संचालक/ पार्टनर म्हणून कार्यरत असतील तर ती कंपनी सुध्दा दोन वर्षांकरिता डीबार (Debar) करण्याची कार्यवाही करण्यात येईल.

यापुढील कामाकरिताच्या मसुदानिविदेत परिपत्रकात नमूद केल्याप्रमाणे अतिरिक्त सुरक्षा अनामत रक्कमेबाबतची अट अंतर्भुत करण्यात यावी.

उपरोक्त सूचनांचे काटेकोरपणे अंमलबजावणी करण्याबाबत सर्व खाते प्रमुख/ सहाय्यक आयुक्त/ रुग्णालय अधिष्ठाता/ वैद्यकिय अधिक्षक/ उप प्रमुख लेखापाल/ लेखा अधिकारी यांनी दक्षता घ्यावी.

(रा. क. आव्हाड)
प्रमुख लेखापाल (वित्त)प्र.

(श्री. अनंत कदम)
उपायुक्त –(पायाभूत सुविधा)

(श्री. विनोद प्र. चिठोरे)
संचालक (अ.से.व.प्र)

(श्री. पी. वेलरासू)
अतिरिक्त आयुक्त (प्रकल्प)

(श्री. इ.बि. वहल)
महानगरपालिका आयुक्त

Scanned with CamScann

पार्टनर इतर कंपनीमध्ये संचालक/ पार्टनर म्हणून कार्यरत असतील तर ती कंपनी सुध्दा योग्य वर्षांकरिता डीबार (Debar) करण्याची कार्यवाही करण्यात येईल.

यापुढील कामाकरिताच्या मसुदानिविदेत परिपत्रकात नमूद केल्याप्रमाणे अतिरिक्त सुरक्षा अनामत रक्कमेबाबतची अट अंतर्भुत करण्यात यावी.

उपरोक्त सूचनांचे काटेकोरपणे अंमलबजावणी करण्याबाबत सर्व खाते प्रमुख/ सहाय्यक आयुक्त/ रुग्णालय अधिष्ठाता/ वैद्यकिय अधिक्षक/ उप प्रमुख लेखापाल/ लेखा अधिकारी यांनी दक्षता घ्यावी.

(रा. क. आव्हाड)
प्रमुख लेखापाल (वित्त)प्र.

(श्री. अनंत कदम)
उपायुक्त –(पायाभूत सुविधा)

(श्री. विनोद प्र. चिठोरे)
संचालक (अ.से.व.प्र)

(श्री. पी. वेलरासू)
अतिरिक्त आयुक्त (प्रकल्प)

(श्री. इ.सि. चहल)
महानगरपालिका आयुक्त

BRIHANMUMBAI MAHANAGARPALIKA

CIRCULAR
2016-17

No.CA/FRD-I/5 dated 10.05.2016

Sub : Delegation of powers for invitation of tenders and composition of Tender Committees.
Ref : Circular No.CA/FRD-I/49 of 08.11.1994

Delegation of powers for invitation of tenders and composition of Tender Committees issued vide circular under No.CA/FRD-I/49 dated 08.11.1994 are still in force. Considering the general increase in the market rates/prices on a large scale on all materials and labour, it is felt necessary to revise the delegation of powers. It has also been observed that there is substantial delay in finalisation of tenders. Hence, detailed review has been taken and it has been decided to revise the said delegation of powers with a view to speedy and timely processing of Tenders.

(A) Definitions

1. **Regular/routine work means the works –**
   - which are carried out regularly with same terms and tender conditions
   - without change in standard drawings/designs
   - without change in technical aspects/specifications
   - without any deviation in nature of work
   - with specific provisions made in Budget with same description
2. **Rank of -**
   - Chief Engineer includes Hydraulic Engineer, City Engineer.
   - HoD includes all major HoDs (as approved by Corporation vide CR/531 of 21.09.2000).
   - Director includes Dir.(E.S.&P.), Dir.(M.E.&M.H.).
   - D.M.C. includes all Dy. Municipal Commissioners.
   - For repair works the HoD for HIC, SIC is Ch.Eng.(B.M.) and for new construction works the HoD is C.E.

CA(F)\D:\Old PC Backup\D:2016-17\Circular\Delegation of power for invitation of tender & composition of TC \1

C-19

(B) Description of powers

1. Technical approval to draft tender document

Particulars	Authorities	Financial limit
(i) Regular/ routine nature of works/ procurement.	Dy.Ch.Eng./Dy.HoD/ Dy.Dean	Upto any amount.
(ii) Other than regular/routine nature of works.	Dy.Ch.Eng./Dy.HoD/ Dy.Dean	Upto Rs.1 crore
	Ch.Eng./HoD/Deans of Major Hospitals	Above Rs.1 crore and upto Rs.5 crore.
	DMCs/Director(ES&P)	Above Rs.5 crore.

2. Administrative approval for Draft Tender and invitation of tender

Particulars	Authorities	Financial limit
(i) Regular /routine nature of works/ procurement.	Dy.Ch.Eng./Dy.HoD/ Dy.Dean	Upto Rs.5 crore.
	Ch.Eng./HoD/Deans of Major Hospitals	Above Rs.5 crore and upto any amount.
(ii) Other than regular/ routine nature of works.	Dy.Ch.Eng./Dy.HoD/ Dy.Dean	Upto Rs.1 crore.
	Ch.Eng./HoD/Deans of Major Hospitals	Above Rs.1 crore and upto Rs.5 crore.
	D.M.Cs./ Directors	Above Rs.5 crore and upto Rs.10 crore.
	A.M.Cs.	Above Rs.10 crore and upto Rs.100 crore.
	M.C.	Above Rs.100 crore

approval of the concerned D.M.C. (in case of estimated cost of tender upto Rs.5 crore) and A.M.C. (in case of estimated cost of tender above Rs.5 crore) for negotiations.

In case of re-invitation of tender, Ch.Eng./HoD should obtain the prior approval of concerned A.M.C. by mentioning the specific reasons for re-invitation.

(E) Verification of Draft Tenders/Proposals/D.L. to M.S. by Accounts Department.

(a) Verification of Draft Tenders for other than regular/routine nature of works/procurement

(i) Accounts Officer (concerned proposal section)	...	Upto Rs.1 crore
(ii) Dy. Chief Accountant (WSSD)	...	Upto Rs.5 crore
Dy. Chief Accountant (Finance)	...	Upto Rs.10 crore
(iii) C.A.(W.S.S.D.)	...	Above Rs.5 crore
C.A.(Finance)	...	Above Rs.10 crore

(b) Vetting of D.L. to M.S./proposals

Under section 69(c)

(i) Dy.Chief Accountant(WSSD)	...	Upto Rs.5 crore (and all D/L to M.S. under Section 72(3)
Dy.Chief Accountant(Finance)	...	Upto Rs.10 crore (and all D/L to M.S. under Section 72(3)
(ii) C.A.(WSSD)	...	Above Rs.5 crore [and all D/L to M.S. under Section 69(c) read with Section 69(e)]
C.A.(Finance)	...	Above Rs.10 crore [and all D/L to M.S. under Section 69(c) read with Section 69(e)]

NOTE :

1. The Ch.Eng./HoD/Deans and their respective deputies **will be fully responsible for -**
   - Technical adequacy and appropriateness of the provisions therein.
   - Correctness of Bill of Quantity (BoQ), clauses of PQC.
   - Inclusion of all the clauses incorporated as per the guidelines/circulars issued from time to time.
2. The Ch.Eng./HoD/Deans and their respective deputies should purchase according to minimum order and re-order level of stock. While sanctioning a purchase, due care should be taken to justify the need for purchase.
3. **When there is no deviation** – (When the nature of work is of regular/routine work) file should not be routed through Accounts department. HoD/Ch.Eng. Should certify that there is no deviation in draft tender and he should also check up the budget provision.
   - **If there is any deviation** – Accounts department will verify the deviated/modified conditions from financial point of view as well as the points mentioned above.
   - **In case of lump sum budget provision** – Concerned Ch.Eng./ HoD/Deans and their respective deputies should submit detailed statement showing liabilities of on-going works and proposed works during the current financial year and financial year wise spill over liability.
   - It is the responsibility of the concerned Ch.Eng./HoD/Deans and their respective deputies to see that there exists a sufficient budget provision to carry out the proposed works.
4. All D/L to M.S. shall be submitted for concerned A.M.C's approval.

C-27

5. D/L to M.S. for value above Rs.100 crore and as per M.C's directives under No.MGC/A/9954 dated 21.07.2014 shall be submitted for M.C's approval.
6. Ch.Eng./HoD/Dean has to prepare the programme for utilization of budget systematically in phasewise manner and the schedule for invitation and finalization of tenders.
7. Concerned D.M.C./Director shall monitor the said programme by taking monthly review and he will be responsible for utilization of budget provisions.

This circular supersedes circular No.CA/FRD/I/49 of 08.11.1994 and shall come into effect immediately.

All Ch.Engs./HoDs/Deans/D.M.Cs. shall note the above directives and follow them scrupulously.

28/4/16. 28/4/16 28/4/16 28/4/2016 28/04/16

C.A.(W.S.S.D.) C.A.(F) D.M.C.(E) D.M.C.(S.E.) Dir.(E.S.&P.)

2/5/16. 30/4 9/5/16

A.M.C.(W.S.) A.M.C.(P) M.C

CA(F)\D:\Old PC Backup\D:2016-17\Circular\Delegation of power for invitation of tender & composition of TC \6

N/27

BRIHANMUMBAIMUNICIPALCORPORATION

(Hydraulic Engineer's Department)

Subject: - Reinstatement of trenches taken by Hydraulic Engineer's Department for laying of various dia water mains and other allied works.

Reference: -
1. Ch.Eng./14467/Rds & Tr dated 26.09.2023.
2. AMC/P/538 dated 28.04.2023.
3. Ch.E/623/MC/Rds & Tr dtd. 14.06.2024.

Reference is requested to this office detailed report as at Pg. No. N- 15 to N- 25.

As per Hon'ble AMC(P)'s directions at Pg.No.N/25, the subject matter was jointly discussed by Ch.Eng.(Rds. & Tr.) & H.E. on 19.07.2024, when AMC(P) directed Ch.Eng.(Rds. & Tr.) & HE to jointly discuss and put up a report regarding methodology to be followed for reinstatement of trenches on Non-DLP / DLP / Project roads. Accordingly, a joint meeting was held on 23.07.2024 with Ch. Engineer (Roads & Traffic) and Hydraulic Engineer regarding the above subject matter when following points were discussed: -

1. In case of Project Roads laying of water mains will be done by H.E. Department and Reinstatement of Trenches along with Road Improvement will be done by Roads Department.
2. In case of DLP Roads laying of water mains will be done by H.E. deptt. and Reinstatement of trenches will be done by Road Department.
3. In case of Non DLP road, laying of water main will be done by H.E. deptt. and reinstatement of trenches will be done by H.E. deptt. as per recent trench policy.
4. For attending works related to leakages/contamination and short supply i.e. WDIP works, considering urgency intimation will be given to concerned Ward Maintenance/Road Department staff and immediately the work will be taken in hand as per approval of then Hon'ble AMC (P) vide Ref. No. 2 above. In case of C.C. road surface, temporary reinstatement of trenches will be done by H.E. deptt. & permanent reinstatement of trenches by Road deptt. In case of Asphalt roads permanent reinstatement of trenches will be done in mastic as per trench policy by H.E. deptt.

During the subsequent meeting of H.E. with Hon'ble AMC(P) on 26.07.2024, this matter was briefed to AMC(P) regarding Reinstatement of trenches of H.E. deptt. ~~trenches~~ on DLP / Non-DLP / Project roads as discussed in joint meeting with Ch.Eng.(Rds. & Tr.) when AMC(P) also discussed matter with Ch.Eng.(Rds. & Tr.) telephonically and directed H.E. to carry out reinstatement of trenches, taken by H.E. deptt. on all Non DLP / DLP roads through H.E. contractor to avoid co-ordination issue & trenches reinstated by H.E. deptt. shall be responsibility of H.E. deptt. during the DLP period.

Accordingly, following final proposal is submitted herewith for approval of DMC(SE) / Hon'ble AMC(P).

1) Project Road (Road project Works / Road improvement works)

In this case water main laying & related works will be executed by H.E. deptt. & reinstatement of trenches along with Road Improvement will be carried out by Road deptt.

2) Non DLP Roads

In this case work of laying of water mains as well as WDIP works such as attending leakage / contamination & short supply complaints will be carried out by H.E. deptt. & reinstatement of trenches will be carried out by H.E. deptt. as per trench policy dtd.02.05.2023 in the existing surface.

3) DLP Roads

a) Trenches for laying of water main in improved CC Road / UTWT / CC passage will be cut with the help of diamond cutter and after execution of H.E.'s work, same will be reinstated by H.E.'s contractor in the CC surface.

b) Trenches taken for laying of water main in improved Asphalt Roads will be reinstated by H.E.'s contractor as per trench policy.

4) WDIP Work

a) Trenches taken to attend emergency works of leakage / contamination / short supply will be reinstated in existing surface as per trench policy through H.E.'s contractor.

b) During monsoon reinstatement of trenches taken in CC Road / UTWT / CC passage will be carried out with Rapid Hardening Cement Concrete as per Circular u/no.Ch.E./753/MC/Rds & Tr. Dtd.26.06.2024.

5) Trenches will be taken for WDIP works i.e. leakage / contamination / short supply by giving prior intimation to Ward / Road deptt. being emergency work as per then AMC(P)'s approval u/no. AMC(P)/538/HE dtd.28.04.2023 and after completion of work, reinstatement work will be carried out through respective WDIP agency of H.E. deptt. in existing surface.

6) Henceforth, all trenches taken for laying of water main work / WDIP work will be reinstated with sand metal as per new trench policy dtd.02.05.2023 and accordingly provision will be made in all upcoming tenders.

On receipt of approval to Sr.No.1 to 6 above, same will be intimated to Ch.Eng.(Rds. & Tr.) & all Asstt. Commissioners of Wards.

In view of above, H.E./D.M.C.(S.E.)'s recommendation and approval of Hon'ble AMC(P) is requested for the Sr. No. 1 to 6 above please.

29/7/24

(Shri. S. S. Rane)
E.E.W.W. (Const.) WS

(Shri. V. B. Ashtankar) 29/7
E.E.W.W. (Const.) City

29/07/24
(Shri. D. B. Adsul)
Dy. H. E. (Const.)

(Shri. P. L. Malwade)
H.E.

ई. उप. मल अभि. (सं.) 1733 मल.अभि.
29 JUL 2024

(Shri. Yatin Dalvi)
D.M.C. (S. E.)

In view of discussion on 26/7/24 regarding R.I. of HE deptt. trenches on projected Rds. DLP roads / Non DLP roads the proposal vide Sr. No. 1 to 6 at Pg N/27-28 is submitted for DMC (SE) / Hon. AMC(P)'s approval.

(Shri. A. S. Bangar)
Hon'ble A. M. C.(P)

Sir,

No. D. M. C/SE/1973

30 JUL 2024

M/29

उप आयुक्त (विशेष अभियांत्रिकी)
यांचे कार्यालय
क्र. उप आ./वि.अ./1973
दिनांक 29/07/2024

The issue is regarding reinstatement of trenches taken by HE department and its reinstatement. In the past, such trenches were reinstated by the contractor concerned of H.E. However, in the recent past, a circular ie. ChEng/14467/Rds&Tr dtd 26.09.2023 was issued with the approval of the then AMC(P) wherein reinstatement of trenches taken by IT department was considered. Along with that, reinstatement of trenches, inter alia, taken by HE department was also considered and it was laid down therein that such reinstatement will be carried out through Road depts.

However, various challenges are faced while adopting this circular. The same are explained in the foregoing reports, more particularly, report @ Pg N-15-24. To circumvent this challenge, HE deptt and Road department have jointly discussed the issue as per the directions of AMC(P). In conclusion, the action to be taken for reinstatement of the trenches is proposed by Dy HE(Contl) and recommended by HE vide Pg N/27-28. The action to be taken is with regards to the Project roads/Road improvement works, Non DLP roads, DLP roads, WDIP roads which is mentioned at Sr. No (1) to (4) @ Pg N/27-28.

The action proposed is also with regards to

(contd @ Pg N/30)

(contd from Pg N/29)

seeking permission for attending leakages. In this, it is proposed that Road/Wards depths will be intimated prior to ~~seeking~~ excavation. The action to be taken is explained at Sr. no (5) at Pg N/28

Also, permission/approval is sought to deploy the item of metal & sand filling for reinstatement of the trenches being executed by HE dept. Sr. No (6) @ Pg N/28

The above proposal is recommended by the undersigned and submitted for approval to sideland portion 'X' @ Pg N/28, pl

30/7/2024
Yatin Shrikant Dalvi
Dy. Municipal Commissioner
(Special Engineering) I/C

AMC (P)
Sir,

बृहन्मुंबई महानगर पालिका
अतिरिक्त आयुक्त (प्रकल्प)
यांचे कार्यालय
30 JUL 2024
क्र. अति.आ./प्रकल्प/2575

Water Main	Project R	Reinstatement Road D
	DLP R	Road D
	Non-DLP R	HE D
Contamination/ Leakage		HE D

infra

e नमुना प्रमाणे
कार्यवाही करावी.

02/08/24

अतिरिक्त महानगरपालिका
आयुक्त (प्रकल्प)

तसेच पृष्ठ क्र. N/48 वरील (A)
प्रमाणे मान्य आहे.

08/08/24

अतिरिक्त महानगरपालिका
आयुक्त (प्रकल्प)

AMC/P/ 2577
Date- 08/08/2024
H.E.
Dy.H.E (Const.)

उ.जअ/ 2456 /एमसी
दि. 9/8/2024

DY HE CONSTN
for n/a as per
HOD. AMC CP's approval.
9/8/24
HE

बृहन्मुंबई महानगरपालिका
जल अभियंता यांचे कार्यालय

सी. आर		आयसी
16	- 9 AUG 2024	आय एस
एन.ओ.एल		एम सी
उअजी	2456	आय
	1958	एस आर
		गोपनीय

उप जल अभियंता (बां) 1958 / दिनांक दि.
9 AUG 2024

E.E. WW. Constn (WS)
For n/a as per AMC (P)'s approval
& P.I circulate to all concern.
9/HE Constn
09/08

बृहन्मुंबई महानगरपालिका
जल अभियंता यांचे कार्यालय
उप जल अभियंता (बांधकाम)

1958	आर आर
	नगर सेवक

५-e

बृहन्मुंबई महानगरपालिका

परिपत्रक

क्र. प्रले/वित्त/प्रकल्प/०५ दि. 08.07.2026

विषय:-प्रमाणित निविदा दस्तऐवज (SBD) मधील, अतिरिक्त सुरक्षा ठेव (Additional Security Deposit) अट सुधारित करण्याबाबत.

संदर्भ:- 1) क्र. प्रले (वित्त)/42 दि.09.01.2021
2) क्र. एमजीसी/एफ/6446 दि.06.10.2025

बृहन्मुंबई महानगरपालिकेच्या विविध खात्यांमधील निविदा प्रक्रियेमध्ये एकरुपता व सुसंगती राखण्याच्या उद्देशाने प्रमाणित निविदा दस्तऐवज (Standard Bid Document - SBD) तयार करण्यात आलेला आहे. तथापि, कालांतराने विविध खात्यांनी वेळोवेळी सक्षम प्राधिका-यांच्या मंजूरीने सदर दस्तऐवजातील अटी व शर्तीमध्ये खातेस्तरावर सुधारणा / बदल केले आहेत.

सद्यस्थितीत, विविध खात्यामार्फत राबविण्यात येणा-या निविदा प्रक्रियेमध्ये अतिरिक्त सुरक्षा ठेव (Additional Security Deposit) रक्कमेच्या अटी व शर्तीमध्ये केलेल्या सुधारणा/बदलांमूळे एकरुपता न राहता संभ्रमाची स्थिती निर्माण होत असल्याचे निदर्शनास आले आहे. या प्रकरणी, मा. महानगरपालिका आयुक्त यांनी संदर्भ क्र. 2 अन्वये अतिरिक्त सुरक्षा ठेव रक्कम भरण्याबाबतची सुधारित अट उपरोक्त संदर्भ क्र. 1 अन्वये निर्गमित परिपत्रकानुसार घेण्याबाबत आदेश पारित केले आहेत.

तदअनुषंगाने, अतिरिक्त सुरक्षा ठेव (Additional Security Deposit) रक्कमेचा सुधारित दर, स्विकारण्याची कार्यपध्दती व परताव्याबाबतची अट खालील नमुद तक्त्यानुसार सुधारित करण्यात येत आहे.

<table>
<tr><th>तपशील</th><th>सद्यस्थितील अट</th><th colspan="2">सुधारित अट</th></tr>
<tr><td rowspan="3">Additional Security Deposit (ASD)</td><td rowspan="3">The additional security deposit will be applicable when a rebate of more than of 12 % at the rate of with no maximum limit. The ASD is calculated as follows: Additional security deposit = (X/100) x office estimated cost,
Where X=percentage rebate</td><td>Rebate quoted by bidder</td><td>ASD applicable</td></tr>
<tr><td>Up to 12% rebate</td><td>No ASD</td></tr>
<tr><td>12.01% to 20% rebate</td><td>1% of estimated cost for each percentage and part</td></tr>
</table>

	quoted above 12% The ASD shall be paid online in the ASD tab for bidders in e-tendering system before submission of the bid. (MCGM Portal)		thereof above 12% rebate For e.g. :- Rebate quoted (-)18.06% ASD = (18.06-12) x 1% x Estimated Cost
		20.01% rebate & above	1% of estimated cost for each percentage and part thereof above 12% upto 20% rebate (i.e. 8%) + 2% extra for each percentage and part thereof over and above 20% rebate For e.g. :- Rebate quoted (-)24.70% ASD = (8% + [(24.70%-20%) x 2]) x Estimated Cost
अ			Along with LOA department shall issue challan of requisite amount of ASD to be deposited by the contractor. The ASD is to be submitted within 15 working days after issue of LOA in the form of Demand Draft at the CFC Counter and submit copy of the receipt to the concerned HOD. If the requisite ASD is not submitted within 15 working days after issue of LOA 10% E.M.D shall be forfeited. Further, if requisite ASD is not submitted within 30 working days after issue of LOA, 100% E.M.D shall be forfeited and the bidder/company shall be debarred for a period of two years. Also, if any Director/ Partner of such company is functioning as Director/Partner in any other company, that company shall also be liable for debarment for two years. Further, the work awarded will be terminated/revoked

प-99

Refund of ASD	The additional security deposit shall be released within 30 days of issue of 'Certificate of Completion' with respect to the whole of the Works. In the event the Engineer issues a Taking-over Certificate for a section or part of the Permanent Works, only such proposition thereof as the Engineer determines (having regard to the relative value of such section or part of the Works) shall be considered by the Engineer for payment to the Contractor.	The additional security deposit shall be released within 30 days of issue of 'Certificate of Completion' with respect to the whole of the Works. In the event the Engineer issues a Taking-over Certificate for a completed works **having separate WBS element,** Only such portion shall be considered for payment to the Contractor.

तसेच, सर्व खाते प्रमुख व कार्यकारी अभियंता तसेच संबंधितांनी **'अ'** येथे नमूद केलेली अट कंत्राटदाराला देण्यात येणा-या स्विकृतीपत्रात अंर्तभूत करण्याची काटेकोरपणे दक्षता घ्यावी.

या द्वारे सर्व खाते प्रमुख / सहाय्यक आयुक्त / रुग्णालय अधिष्ठाता / वैद्यकिय अधिक्षक / उप प्रमुख लेखापाल / लेखा अधिकारी यांना आदेश देण्यात येत आहे कि, सदर परिपत्रक निर्गमित झाल्याच्या दिनांकापासून अंदाजित रक्कमेवर मागविण्यात येणा-या निविदेमध्ये अतिरिक्त सुरक्षा ठेव रक्कमेची सुधारित अट अंतर्भूत करण्याबाबत काटेकोरपणे अंमलबजावणी करण्याची दक्षता घ्यावी.

प्रमुख लेखापाल (पा.पू.म.नि) प्र.

प्रमुख लेखापाल (वित्त) प्र.

सह आयुक्त (वित्त)

अतिरिक्त आयुक्त (प्रकल्प)

महानगरपालिका आयुक्त

BRIHANMUMBAI MUNICIPAL CORPORATION

No. DMC/SWM/ 1658 Date: 11.08.2026

CIRCULAR

Subject: Standard Operating Procedure (SOP) for Construction & Demolition (C&D) Waste Management within Mumbai Limits.

Reference:
1. Construction & Demolition Waste Management Rules, 2016
2. Construction & Demolition Waste Management Rules, 2025
3. Approval of Hon. Municipal Commissioner U/No MGC/F/1701 Dt 11.08.2026

1. Applicability

This circular shall apply to all waste generators of C&D waste within the Mumbai limits, including projects processed through the AutoDCR system as well as those not routed through the AutoDCR system.

2. Mandatory Segregation of Waste at Source.

a) All C&D waste generators undertaking demolition, excavation or construction activities shall ensure mandatory segregation of waste at source into the following categories:
   - Excavation Material (Soil / Murum / Rock/Earth/muck)
   - Construction & Demolition (C&D) Debris

b) Mixing of excavation material and C&D debris during loading, transportation or disposal shall not be permitted and will be sole responsibility of the generators.

c) Transportation of Construction & Demolition (C&D) Debris shall be carried out only to authorized recycling facilities and excavated material shall be transported to designated unloading sites approved by the SWM Department. The circular u/no. MGC/F/1369 dated 31.01.2020 is withdrawn and designated unloading sites shall be approved by the SWM Department as per point no.7.1. a. below.

3. Guidelines for C&D Waste Management plan

A. Through AutoDCR- (Developers/Architects/Project Management Consultants/SRA/ MHADA/ Any other building construction works). Following guidelines are applicable to building redevelopment and construction projects routed through the AutoDCR system under the jurisdiction of the BMC.

a) The generator shall submit a Waste Management Plan (WMP) through AutoDCR, clearly indicating the estimated quantity of C&D waste to be generated. The estimation shall distinctly specify:
   a. Demolition waste
   b. Excavation waste (Soil / Murum / Rock/Earth/muck)
   c. Vertical construction waste

b) The declared quantity of C&D waste in Demolition, and Vertical construction shall be in line with Technology, Information, Forecasting & Assessment Council (TIFAC) thumb rule under **Utilisation of Waste from Construction Industry of issued by Department of Science and Technology, Government of India viz.**
   1. *Average generation of waste during construction process is estimated to be 40 to 60 kg per sq.*
   2. *Similarly, waste generated during renovation/ repairs is estimated to be 40 to 50 kg/sq.*

3. *Maximum generation of waste from construction industry relates to demolition of buildings and is estimated to be 500 and 300 kg/ sq. for Pucca and Semi-Pucca buildings respectively.*

c) For Demolition Waste, the applicant shall obtain C&D WMP in slabs of minimum 25% of the self-declared quantity at initial stage.

d) The excavation quantity declared in the Royalty Document shall be reflected into the C&D Waste Management Plan. For each and every Royalty Document, separate C&D Waste Management Plan shall be submitted. The validity of C&D Waste Management Plan will be same as the validity of royalty document.

e) The generator shall transport C&D waste through empanelled transporters under SWM Department only.

f) The empanelled transporters shall mandatorily avail VTMS (Vehicle Tracking and Monitoring System) services from BMC's empanelled VTMS Service Provider

g) The transported waste shall be disposed of only at authorized facilities, as follows:
   - C&D debris shall be transported to authorized C&D recycling facilities.
   - Excavation waste shall be transported to designated unloading sites.

h) Validity of C&D Waste Management plan for Demolition and Vertical Waste shall be as follows.
   - Up to 500 Brass – Valid for 6 months
   - Above 500 Brass – Valid for 1 year

i) In case the C&D Demolition WMP for BMC recycling facility expires before completion of disposal of the declared quantity, the waste generator shall revalidate C&D Waste Management Plan with due procedure.

j) A receipt certificate confirming the quantity of C&D waste received shall be issued in name of generator by the authorized recycling facility upon acceptance of the waste.

B. Through SWM C&D Portal- MDCTS

The provisions shall be applicable to the following:
- Mumbai Metropolitan Region Development Authority (MMRDA)
- Metro Rail Authorities
- MIDC & BPT
- Indian Railways
- Public Works Department (PWD)
- Other Government Departments/ semi-government/ PSU executing civil works
- Contractors undertaking works on behalf of public agencies
- Infrastructure agencies and utility service providers
- Bulk waste generators/producers not covered under AutoDCR.

a) The applicant shall submit a C&D Waste Management Plan (WMP) to the concerned Zonal Executive Engineer (SWM) through C&D Portal- MDCTS, clearly indicating the total estimated quantity of C&D waste to be generated. The estimation shall distinctly specify:
   - Demolition waste
   - Excavation waste (Soil / Murum / Rock/Earth/muck)
   - Vertical construction waste

b) The applicant shall upload a certificate of the quantity of C&D waste mentioned in the plan certified and verified by the concerned authority's official not below the rank of Executive Engineer.

c) The concerned authority shall verify that the contractor has implemented and executed the C&D Waste Management Plan as declared during the course of the work.

d) The Contract Security Deposit of the generator shall be released by the concerned authority only after taking remark from Concerned BMC SWM Zonal Executive Engineer

e) For Demolition Waste, the applicant shall obtain C&D WMP in slabs of minimum 25% of the self-declared quantity at initial stage.
f) The excavation quantity declared in the Royalty Document shall be reflected into the C&D Waste Management Plan. For each and every Royalty Document, separate C&D Waste Management Plan shall be submitted. The validity of C&D Waste Management Plan will be same as the validity of royalty document.
g) The generator shall transport C&D waste through empanelled transporters under SWM Department only.
h) The empanelled transporters shall mandatorily avail VTMS (Vehicle Tracking and Monitoring System) services from BMC's empanelled VTMS Service Provider
i) The transported waste shall be disposed of only at authorized facilities, as follows:
   - C&D debris shall be transported to authorized C&D recycling facilities.
   - Excavation waste shall be transported to designated unloading sites.
j) Validity of C&D Waste Management plan for Demolition and Vertical Waste shall be as follows.
   - Up to 500 Brass – Valid for 6 months
   - Above 500 Brass – Valid for 1 year
k) In case the C&D Demolition WMP for BMC recycling facility expires before completion of disposal of the declared quantity, the waste generator shall revalidate C&D Waste Management Plan through the prescribed system
l) A receipt certificate confirming the quantity of C&D waste received shall be issued in name of generator by the authorized recycling facility upon acceptance of the waste.
m) The concerned work executing authority shall maintain all necessary records and documentation related to generation, transportation and disposal of Construction & Demolition (C&D) waste.

C. BMC Appointed Contractors for civil works.

a) All contractors appointed by BMC for carrying out civil works shall submit a C&D Waste Management Plan (WMP) to concerned Zonal Executive Engineer (SWM) through SWM C&D Portal-MDCTS, clearly indicating the estimated quantity of C&D waste to be generated. The estimation shall distinctly specify:
   a. Demolition waste
   b. Excavation waste (Soil / Murum /Rock/Earth/muck)
   c. Vertical construction waste
b) The applicant shall upload a certificate of the quantity of waste mentioned in the plan certified and verified by the Executive Engineer of concerned Department.
c) The contractor & concerned BMC Department shall ensure that all C&D waste generated from the work is transported and disposed of strictly in accordance to the Waste Management Plan and only at authorised facilities approved by the Brihanmumbai Municipal Corporation.
d) Further, the contract security deposit taken by concerned BMC department shall be released only after obtaining remarks from the concerned SWM Zonal Executive Engineer.
e) For Demolition Waste, the applicant shall obtain C&D WMP in slabs of minimum 25% of the self-declared quantity.
f) The excavation quantity declared in the Royalty Document shall be reflected into the C&D Waste Management Plan. For each and every Royalty Document, separate C&D Waste Management Plan shall be submitted. The validity of C&D Waste Management Plan will be same as the validity of royalty document.
g) The generator shall transport C&D waste through empanelled transporters under SWM Department only.
h) The empanelled transporters shall mandatorily avail VTMS (Vehicle Tracking and Monitoring System) services from BMC's empanelled VTMS Service Provider

i) The transported waste shall be disposed of only at authorized facilities, as follows:
   a. C&D debris shall be transported to authorized C&D recycling facilities.
   b. Excavation waste shall be transported to designated unloading sites.

j) Validity of C&D Waste Management plan for Demolition and Vertical Waste shall be as follows.
   - Up to 500 Brass – Valid for 6 months
   - Above 500 Brass – Valid for 1 year

k) In case the C&D Demolition WMP for BMC recycling facility expires before completion of disposal of the declared quantity, the waste generator shall revalidate C&D Waste Management Plan through the prescribed system.

l) A receipt certificate confirming the quantity of C&D waste received shall be issued in name of generator by the authorized recycling facility upon acceptance of the waste.

m) The concerned BMC Department shall maintain all necessary records and documentation related to generation, transportation and disposal of Construction & Demolition (C&D) waste.

D. Handling of C&D Waste from BMC Maintenance, Building and Factory departments Demolition and Encroachment Removal Works.

a) Construction & Demolition (C&D) waste generated during demolition carried out by maintenance works, cleanliness drives, and other activities carried out by BMC departments on Municipal Roads etc. shall be treated as unclaimed C&D waste and shall be+ handled through the authorized disposal mechanism of the Brihanmumbai Municipal Corporation.

b) C&D waste generated from demolition actions carried out by the Building & Factory Department, including removal of unauthorized structures or demolition of dangerous buildings, may either be treated as unclaimed waste or cleared by charging necessary disposal fees, as decided by the concerned Ward Office, with the approval of the Zonal Deputy Municipal Commissioner (DMC).

4. Consent Letter:

a) The generator shall obtain consent letter from the Authorised Unloading Site

b) The consent letter shall not be treated as proof of disposal. It is only a pre-disposal approval issued to confirm site readiness and availability of space for receiving Excavation waste at the selected site.

5. Debris on call.

a) The "Debris on Call" system, currently operational under the respective Ward offices for collection of Construction & Demolition (C&D) waste generated by small generators and non-developer sources, shall continue to operate as per the existing mechanism.

b) The concerned ward Junior Supervisor (SWM) shall visit the site for verification and approval.

6. Authorised Facilities & Rate structure for C&D Waste in Mumbai

6.1. Transportation of Excavation Material.

a) Excavation material generated within the limits of the BMC shall be transported only to the authorised unloading sites.

b) The site handling charges for Deonar Intermediate Storage Facility will be ₹80 per ton.

c) The applicant shall ensure availability of the following for excavation material disposal at unloading sites
   - e-Transit Pass (eTP) issued by Revenue Department
   - Royalty Receipt
   - C&D Waste Management Plan (Excavation)
   - VTMS.

6.2. Collection, Transportation & Processing Charges for C&D Debris.

a) It is proposed that acceptance of C&D debris shall be regulated through the following approved rate structure within the jurisdiction of the Brihanmumbai Municipal Corporation:
   1) Collection & Transportation through Authorised C&D Contractor.
      a) City & Eastern Suburbs — ₹1,425 per MT
      b) Western Suburbs — ₹1,415 per MT
   2) Direct Transportation by Waste Generator. (Processing of C&D Debris Charges)
      a) City & Eastern Suburbs — ₹715 per MT
      b) Western Suburbs — ₹710 per MT

   These rates are subject to annual escalation.

b) Mixed waste shall not be accepted at Recycling Facilities or Intermediate Storage Facilities.

c) Each trip transporting C&D debris shall be supported by:
   - Valid vehicle documents
   - AutoDCR payment receipt / digital payment confirmation
   - C&D Waste Management Plan (C&D -Debris)
   - VTMS.

d) All payments shall be made through the designated digital platform prior to disposal. The rates shall be subject to annual revision / escalation as applicable under contractual provisions.

e) Any new listing of C&D facility will be published on portal along with applicable rates.

7) Authorized Designated Unloading Sites and Establishment of Recycling Facilities within BMC Jurisdiction

7.1.a. Procedure for approval of designated unloading sites for unloading Excavated material for plots outside BMC Jurisdiction & for plots in BMC Jurisdiction:

Sr.No	Description	Compliance
1	Application to be submitted by Owner of the land outside BMC limit.	Application comprises of following documents: 1) Copy of application submitted to Local Planning Authority for obtaining permission to unload excavated material at said site & to declare the said site as designated unloading site. On which following details shall be mentioned: a) Site details such as Site address, Survey Number, Name of Gram Panchayat /Nagar Parishad /Nagar Palika etc. shall be mentioned. b) Quantity of Excavated Material Required must be clearly mentioned. 2) Original Copy of permission issued by Local Planning Authority for unloading excavated material for that specific site. The said permission shall clearly mention type of material required for filling, quantity of filling material required & time period allowed for filling. 3) Location map of site certified by local authority. 4) Google map -location of site, along with GPS co-ordinates
2	For Plot in BMC Jurisdiction and for	1) DP Remarks of the plot (to be obtained online from BMC portal)

	Backfilling at construction sites	2) Remarks /NOC from Assistant Commissioner of the concerned ward for land use / filling & levelling based on DP remarks. 3) Remarks / NOC from SWD Department clearly stating that filling will not cause flooding at upstream, within, around and downstream of the plot.
3	If the applicant is owner of stone crusher unit	Approval of MPCB and Collector.
4	NOC/Remarks of CRZ/Forest department, eco-sensitive zone etc.	Wherever applicable.
5	Land documents	a) Certified Copies of Property Card / or 7/12 extract & other document from competent authority. b) Consent from all stake holders mentioned on property card / 7/12 extract certified by local authority
6	Undertaking on Rs.500/- stamp paper in prescribed format stating	a) Compliance of condition of C & D Rules, 2025. b) Submission of Bank Guarantee of requisite amount & in prescribed format. c) Sole responsibility about authenticity of submitted papers along with application, Consent letter issued & responsibility of any lapses regarding transportation & unloading of material at site & all related environmental concerns. The applicant shall obtain permission, if any, for transportation of excavated material outside BMC jurisdiction at own level.
7	Details of contact / communication person of unloading site owner	a) Name b) Mobile Number c) E-mail ID. d) Adhaar Card.
8	Processing proposal for uploading site on Auto DCR portal	The zonal Ex. Engr. (SWM) shall put up proposal for Dy. Ch.E. (SWM) Op. / Ch.E. (SWM)'s recommendation and approval of DMC/ Jt. M.C.(SWM)
10	Approval of the proposal to declare the proposed site as designated unloading site	D.M.C./Jt. M.C.(SWM)

7.1.b Penal Action- If any lapses are observed regarding unloading the material at designated site 1st time penalty equivalent to 25% of the total B.G. Amount will be recovered, for 2nd instance a penalty equivalent to another 25% of the total B.G. Amount will be recovered, for 3rd instance the penalty equivalent to remaining 50% of the total B.G. Amount will be recovered & after 4th instance the site will be revoked from Auto-DCR portal. If applicant fails to submit the penalty the B.G. will be forfeited & site will be revoked form Auto-DCR Site with immediate effect.

7.2. *Establishment of Private C&D Waste Recycling Facilities/In-situ Recycling.*

a) If any individual, private entity or waste generator proposes to establish a Construction & Demolition (C&D) waste recycling facility within the jurisdiction of the Brihanmumbai Municipal Corporation, such initiatives shall be encouraged in order to enhance recycling capacity and promote sustainable waste management practices.

b) The waste generator/producer shall, as far as practicable, undertake recycling of Construction & Demolition waste through in-situ processing at the project site. Where in-situ recycling is not feasible, the waste shall be transported only to authorised off-site recycling facilities. Such recycling shall be carried out in accordance with the provisions of the Construction & Demolition Waste Management Rules, 2025 and the applicable Extended Producer Responsibility (EPR) obligations.

c) The proposed facility provider shall be required to obtain all necessary permissions and approvals from the concerned authorities and shall comply with the guidelines and regulatory requirements prescribed by the Maharashtra Pollution Control Board and the Central Pollution Control Board. The establishment and operation of such facilities shall also be subject to compliance with applicable environmental norms, municipal regulations, and provisions of the Construction & Demolition Waste Management Rules.

8. Mandatory VTMS Integration

a) The Solid Waste Management Department shall empanel authorized transporters who must mandatorily install Vehicle Tracking Management System (VTMS) devices from empaneled VTMS service providers to ensure real-time monitoring of C&D waste from the generation site to authorized disposal or recycling facilities.

b) All the VTMS data shall be integrated with C&D Waste Portal.

c) The VTMS shall be checked at all unloading sites, storage facility and recycling facilities.

d) The vehicle transporting C&D waste without authorised VTMS device will be treated as non-complaint and action will be taken as per bylaws.

9. Utilisation of Excavation Material.

a) In order to promote sustainable material reuse and circular economy principles, excavation material generated within the jurisdiction of the Brihanmumbai Municipal Corporation shall, wherever feasible, be prioritised for reuse in authorised construction and infrastructure projects within the city.

b) Excavation material stored at the Deonar Intermediate Storage Facility will be made available to developers, contractors, infrastructure agencies and BMC departments requiring soil or earth for backfilling, land development or infrastructure works.

- The rates for such material shall be charged as per the prevailing Revenue Department's rates applicable for minor minerals.
- Necessary permissions and documentation prescribed by the BMC SWM Department and the Revenue Department shall be complied with prior to lifting the material.

c) This provision is intended to reduce dumping of usable soil, optimise resource utilisation, and support environmentally sustainable construction practices within Mumbai.

10. Extended Producer Responsibility (EPR) and Recycling Obligation

a) In accordance with the provisions of the Construction & Demolition Waste Management Rules, 2025, every waste generator/producer undertaking demolition, redevelopment or reconstruction projects shall fulfil the applicable Extended Producer Responsibility (EPR) obligations notified by the Central Government from time to time.

b) The waste generator/producer shall ensure recycling of Construction & Demolition waste in accordance with the minimum recycling targets prescribed under the Construction & Demolition Waste Management Rules, 2025.

c) The responsibility of achieving the prescribed recycling target shall remain with the waste generator/producer irrespective of whether recycling is undertaken through authorised off-site recycling facilities or through approved in-situ recycling facilities.

11. Penal Provisions

Any violation of the provisions of this circular within the jurisdiction of the Brihanmumbai Municipal Corporation shall attract penal action under the applicable Solid Waste Management Rules, Municipal Regulations and BMC By-Laws. Action shall be initiated for violations including, but not limited to:

a) Vehicles transporting excavation material or C&D waste without an active empanelled Vehicle Tracking Management System (VTMS) device shall not be permitted for disposal.

b) A penalty up to ₹25,000 per vehicle per instance, as prescribed under the applicable Solid Waste Management Buy-Laws of the Brihanmumbai Municipal Corporation, may be imposed on the waste generator or transporter responsible for the violation.

Sd/-
Dt 05.08.2026
Shri. Avinash Kate
Ch. E (SWM) Project

Sd/-
Dt 06.08.2026
Shri. Vinayak Bhat
Ch. E (SWM)

Sd/-
Dt 06.08.2026
Shri. Kiran Dighavkar
DMC (SWM)

Sd/-
Dt 07.08.2026
Dr. Shri Vipin Sharma
AMC(W.S.)

Sd/-
Dt 10.08.2026
Smt. Ashwini Bhide
Hon. M.C.

CC-

For information and necessary action.

11/08/26

Shri. Kiran Dighavkar
DMC (SWM)